GRT INSTITUTE OF ENGINEERING AND TECHNOLOGY, Tiruttani.

(Approved by AICTE, New Delhi Affiliated to Anna University, Chennai.)

Department of Electronics & Communication Engineering

III Year - Vth Semester

CONTENTS

MINIMUM LEARNING MATERIAL

REGULATION – 2013

EC6501 DIGITAL COMMUNICATION L T P C 3 0 0 3

UNIT I SAMPLING & QUANTIZATION 9

Low pass sampling – Aliasing- Signal Reconstruction-Quantization - Uniform & non-uniform quantization - quantization noise - Logarithmic Companding of speech signal- PCM – TDM

UNIT II WAVEFORM CODING 9

Prediction filtering and DPCM - Delta Modulation - ADPCM & ADM principles-Linear Predictive Coding

UNIT III BASEBAND TRANSMISSION 9

Properties of Line codes- Power Spectral Density of Unipolar / Polar RZ & NRZ – Bipolar NRZ - Manchester- ISI – Nyquist criterion for distortionless transmission – Pulse shaping – Correlative coding - Mary schemes – Eye pattern - Equalization

UNIT IV DIGITAL MODULATION SCHEME 9

Geometric Representation of signals - Generation, detection, PSD & BER of Coherent BPSK, BFSK & QPSK - QAM - Carrier Synchronization - structure of Non-coherent Receivers - Principle of DPSK.

UNIT V ERROR CONTROL CODING 9

Channel coding theorem - Linear Block codes - Hamming codes - Cyclic codes - Convolutional codes - Vitterbi Decoder

TOTAL: 45 PERIODS

OUTCOMES: Upon completion of the course, students will be able to

- Design PCM systems
- Design and implement base band transmission schemes
- Design and implement band pass signaling schemes
- Analyze the spectral characteristics of band pass signaling schemes and their noise performance
- Design error control coding schemes

TEXT BOOK:

1. S. Haykin, “Digital Communications”, John Wiley, 2005

REFERENCES:

1. B. Sklar, “Digital Communication Fundamentals and Applications”, 2nd Edition, Pearson Education, 2009
2. B.P.Lathi, “Modern Digital and Analog Communication Systems” 3rd Edition, Oxford University Press 2007.
3. H P Hsu, Schaum Outline Series - “Analog and Digital Communications”, TMH 2006
4. J.G Proakis, “Digital Communication”, 4th Edition, Tata Mc Graw Hill Company, 2001.

UNIT I SAMPLING & QUANTIZATION

1. Define Sampling Theorem.
A bandwidth signal having no spectral components above fm Hz can be determined uniquely by values sampled at uniform intervals of Ts ≤ 1/2Fm Seconds. This particular theorem is also known as the uniform sampling theorem

2. Define Nyquist rate
The Nyquist rate of sampling which gives the minimum sampling frequency needed to reconstruct the analog signal from sampled waveforms ie.,fs ≥ 2 fm

3.What is meant by natural sampling
The sampling in which flat top rectangular pulse of finite width to sample the analog waveform is called as natural sampling because the top of each pulse in the sampled sequence retains the shape of the original signal during the pulse interval

4. What is meant by sampler implementation
The implementation of a sampler is most commonly done in sample and hold circuits. In this operation a switch and storage mechanism is used to form a sequence of sample of the analog input waveform. These samples look like PAM waveform as the amplitude of the sampled pulses can vary continuously

5. What is meant by transition bandwidth
The realizable filters require non zero bandwidth for the transition between the pass band and stop band commonly known as transition bandwidth.

6. Define Quantization
The conversion of the analog form of the signal to discrete form takes place in quantizer. The sampled analog signal is still analog, because though discretised in time, the signal amplitude can take any value as it may wish. The quantizer forces the signal to take some discrete values from the continuous amplitude values.

7.What is meant by uniform quantizer and quantile interval
When the quantization levels are uniformly distributed over the full range, then the quantizer is called as uniform quantizer. The step size between the quantization levels called as quantile interval.

8. Define SNR at the output of quantiser
It is defined as the ratio of the signal power to the quantization noise power. Generally noise power is expressed on an average basis whereas the signal power may be peak power or average power

9. Define companding.(MAY/JUN2016))(NOV/DEC2016)
The predistortion of signal by a logarithmic compression characteristics and put it to an uniform quantiser. The compressed and quantized signal is transmitted through the channel and can be undistorted at the receiver by the same algorithm. This process is known as companding. (The process of compression and expansion is collectively referred as companding)

10. Draw the block diagram of PCM systems
Transmitter:

Receiver:

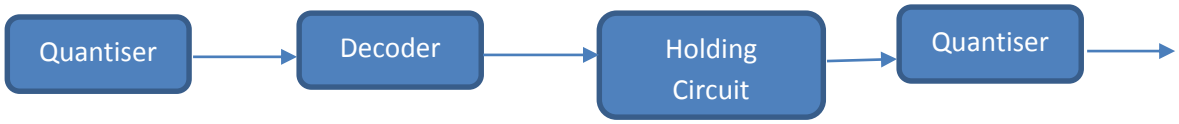

11. What are the noises in typical PCM Systems?

Aliasing noise
Quantization noise
Channel noise
Intersymbol noise

12. Define predictor gain

It is defined as the ratio of the variance of the input sequence to the mean square error of the predicted output. It gives an estimate of the factor by which the input signal power dominates the noise power introduced by predictor

13. What are the two types of adaptive quantizers

- Adaptive Quantisation with forward estimation : Unquantised samples of the input singal are used for estimation

- Adaptive Quantization with backward estimation: Samples of quantiser output are used for estimation

14. What is model based encoding

Model based encoding aim to characterize the signal in terms of its various parametes and then encode those parameters not signal. The decoder at the receiver after obtaining the encoded parameter values,synthesisises the signal from those parameters.

15. In a PCM system the number of bits per symbol is raised from 8 to 10. Then calculate the SNR improvement in dB.

S/N=4.8+6v
S/N for 8 bits= 4.8+6(8) = 52.8 dB
S/N for 10 bits= 4.8+6(10) = 64.8 dB

16. Compare speech encoding methods

Encoding method	Quantizer	Coder (bits)	Transmission rate (kbps)
PCM	Linear	12	96
PCM	Logarithmic	7-8	56-64
DPCM	Logarithmic	4-6	32-48
ADPCM	Adaptive	3-4	24-32
DM	Binary	1	32-64
ADM	Adaptive binary	1	16-32

LPC			2.4-4.8

17. Define TDM

Time-division multiplexing (TDM) is a method of transmitting and receiving independent signals over a common signal path by means of synchronized switches at each end of the transmission line so that each signal appears on the line only a fraction of time in an alternating pattern. This form of signal multiplexing was developed in telecommunications for telegraphy systems in the late 1800s, but found its most common application in digital telephony in the second half of the 20th century.

18.What are the applications of TDM

- Theplesiochronous digital hierarchy (PDH) system, also known as the PCM system, for digital transmission of several telephone calls over the same four-wire copper cable (T-carrier or E-carrier) or fiber cable in the circuit switched digital telephone network

- The synchronous digital hierarchy (SDH)/synchronous optical networking (SONET) network transmission standards that have replaced PDH.

- The Basic Rate Interface and Primary Rate Interface for the Integrated Services Digital Network (ISDN).

- The RIFF (WAV) audio standard interleaves left and right stereo signals on a per-sample basis

19. Define SDH Cross connect in TDM

SDH Crossconnect – The SDH Crossconnect is the SDH version of a Time-Space-Time crosspoint switch. It connects any channel on any of its inputs to any channel on any of its outputs. The SDH Crossconnect is used in Transit Exchanges, where all inputs and outputs are connected to other exchanges

20. Why PCM is prepared for speech?

With the help of sufficient number of bits per sample(8 / 16 bits), it is possible to obtain good dynamic range with PCM. Speech applications have wide dynamic range.

21.Define Aliasing. .(MAY/JUN2016)

When the high frequency interferes with low frequency and appears as low frequency,then the phenomenon is called aliasing

Effects of aliasing

Since high and low frequency interferes with each other, distortion is generated. The data is lost and it can't be recovered.

22. what is law of companding? .(MAY/JUN2016)(NOV/DEC2016)

The input signal is compressed at the transmitter side. During reconstruction at the receiver, the signal is expanded. The process of compression and expansion is called companding.

Compression(transmitter)+expansion(receiver)= companding

23.state sampling theorem for bandlimted signals and the filter to avoid aliasing? (NOV/DEC2015)

When sampling rate is made higher than 2W, then the spectrums will not overlap and there

will be sufficient gap between the individual spectrums.

The sampling rate is $f_s = 2W$, there should be no aliasing. But there can be few components higher than 2W.these components create aliasing. hence low pass filter is used before sampling. The output of low pass filter is strictly bandlimited and there are no frequency components higher than W. then there will be no aliasing

PART-B

1. Define sampling and explain Impulse sampling and Natural sampling in detail
2. Explain sampler implementation without oversampling and with oversampling
3. Explain Quantization and its types
4. Explain Geometric Representation of signals
4. Explain PCM system, word size and bandwidth
5. Explain noise in PCM System
6. Derive the SNR for Non-uniform quantization?
7. Draw and Explain Time Division Multiplexing and its application
8. Explain the concept of aliasing and its effect and explain how to overcome aliasing.
9. Explain Logarithmic companding of speech signal
10. Explain Aliasing and its effects and give its significance

UNIT II WAVEFORM CODING

PART-A

1. Define linear prediction.(MAY/JUN2016)

Linear prediction is a mathematical operation where future values of a discrete-time signal are estimated as linear of previous samples.

In digital signal processing, linear prediction is often called linear predictive coding (LPC) and can thus be viewed as a subset of filter theory. In system analysis (a subfield of mathematics), linear prediction can be viewed as a part of mathematical modeling or optimization

2. Define DPCM

Differential pulse-code modulation (DPCM) is a signal encoder that uses the baseline of pulse-code modulation (PCM) but adds some functionality based on the prediction of the samples of the signal. The input can be analog signal or a digital signal.

3. What is main difference in DPCM and DM?

DM enclose the input samples by only one bit. Its sends the information about +Δ or -Δ, ie, steps rise or fall.

DPCM can have more than one bit for encode the sample. Its sends the information about difference between actual sample value and predicted sample value.

4.**mention the merits of DPCM.**

Bandwidth is less compared to PCM

Quantization error id reduced because of prediction filter

Number of bits used to represent one sample value are also reduced compared to PCM.

5. Define Delta modulation

Delta modulation (DM)is a subclass of differential pulse code modulation, can be viewed as

simplified variant of DPCM, in which 1-bit quantizer is used with fixed first order predictor it was developed for voice telephony applications.

6. what are the advantages of LPC?

The encoded data rate is lowest

The bit allocation depends upon specific characteristics of signal.

7. What are the noises of DM?

These distortions are: slope overload distortion and granular noise.

Slope overloaddistortion - caused by use of step size delta which is too small to follow portions of waveform that have a steep slope.

Can be reduced by increasing the step size.

Granular noise - caused by too large step size in signal parts with small slope. It can be reduced by decreasing the step size.

8. Draw the subband ADPCM

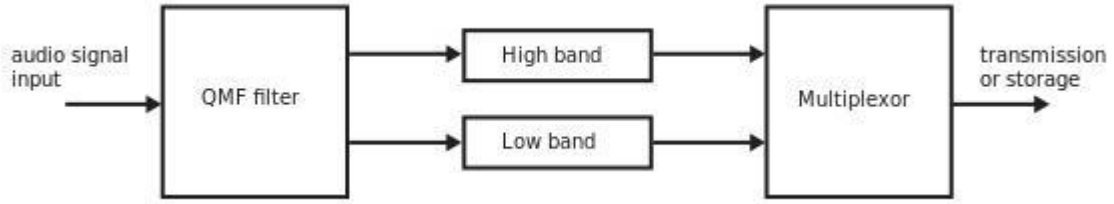

9. Define ADPCM

Adaptive differential pulse-code modulation (ADPCM) is a variant of differential pulse-code modulation(DPCM) that varies the size of the quantization step, to allow further reduction of the required bandwidth for a given signal-to-noise ratio.

10. What are the applications of ADPCM?

An ADPCM algorithm is used to map a series of 8 bit µ-law (or a-law) PCM samples into a series of 4 bit ADPCM samples. In this way, the capacity of the line is doubled. The technique is detailed in the G.726 standard.

Some ADPCM techniques are used in Voice over IP communications. ADPCM was also used by Interactive Multimedia Association for development of legacy audio codec known as ADPCM DVI, IMA ADPCM or DVI4, in the early 1990s

11. What is the bit rate of DM?

If the communication channel is of limited bandwidth,there is the possibility of interference in either DM or PCM. Hence, 'DM' and 'PCM' operate at same bit-rate which is equal to N times the sampling frequency

12. Draw the wave form of DM

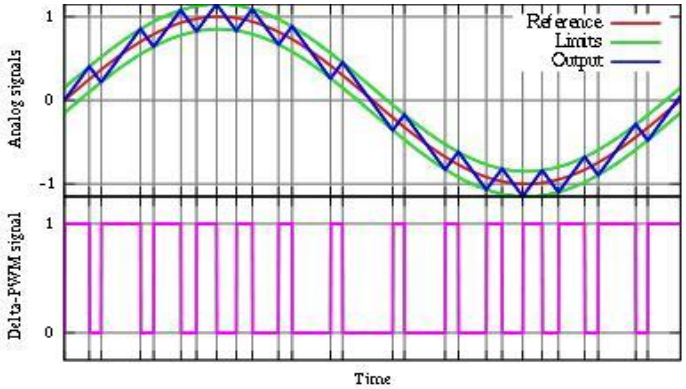

13. Draw DM Communication system

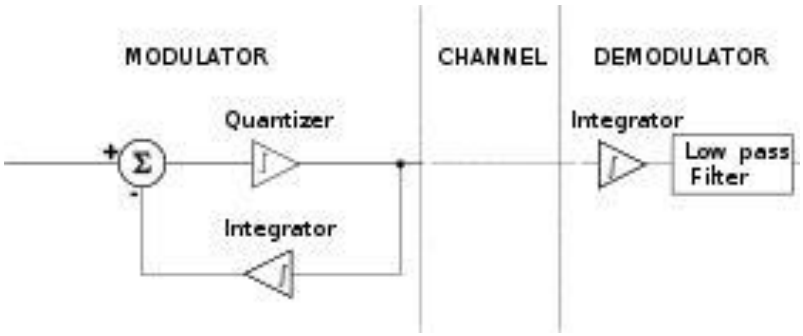

14. What is the maximum amplitude in DM system

Maximum Amplitude of Input signal can be

$$A_{max} = \frac{\sigma f_s}{\omega}$$

Where fsis Sampling Frequency and ω is the Frequency of the input Signal and ζ is Step Size in Quantization. So Amax is the Maximum Amplitude that DM can transmit without causing the Slope Overload and the Power of Transmitted Signal depends on the Maximum Amplitude.

15. Define linear predictive coding (LPC)?

Linear predictive coding (LPC) is a tool used mostly in audio signal processing and speech processing for representing the spectral envelope of digital signal of speech in compressed form, using the information of a linear predictive model. It is one of the most powerful speech analysis techniques, and one of the most useful methods for encoding good quality speech at a low bit rate and provides extremely accurate estimates of speech parameters.

16. Draw ADM transmitter

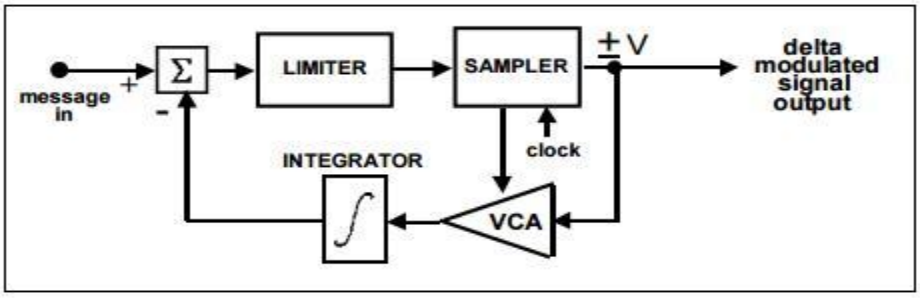

17. Draw the block diagram of Voltage controlled amplifier in ADM

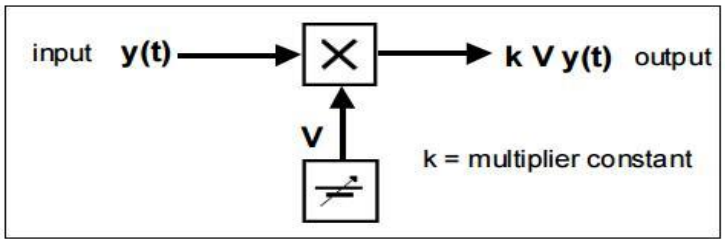

18. What are the applications of LPC

- LPC is generally used for speech analysis and re synthesis.
- It is used as a form of voice compression by phone companies, for example in the GSM standard. It is also used for secure wireless
- LPC synthesis can be used to construct vocoders
- LPC predictors are used in Shorten, MPEG-4 ALS, FLAC, SILK audio codec, and other lossless audio codecs.
- LPC is receiving some attention as a tool for use in the tonal analysis of violins and other stringed musical instruments

19. What are LPC coefficient representation

There are more advanced representations such as log area ratios (LAR), line spectral pairs (LSP) decomposition and reflection coefficients. Of these, especially LSP decomposition has gained popularity, since it ensures stability of the predictor, and spectral errors are local for small coefficient deviations.

20. What is inverse filtering?

LPC analyzes the speech signal by estimating the formants, removing their effects from the speech signal, and estimating the intensity and frequency of the remaining buzz. The process of removing the formants is called inverse filtering

21.Write the advantages of delta modulation.(MAY/JUN2016)

- Delta modulation transmits only one bit for one sample. Thus signaling rate and transmission channel bandwidth is quite small for delta modulation
- The transmitter and receiver implementation is very simple for delta modulation. There is no analog converter involved in delta modulation.

22.How to overcome slope overload noise? (NOV/DEC2016)

The rate of rise of input signal x(t) is so high that the staircase signal cannot approximate it, the step size δ becomes too small for staircase signal u(t) to follow the step segment of x(t).thus there is a large error between the staircase approximated signal and the original input signal(t).this error is called slope overload distortion.

To reduce this error the step size should be increased when slope of signal of x(t) is high.

23.what is the need for prediction filter? (NOV/DEC2016)

The speech signal x(k) is the digitized signal. It is obtained by sampling the continuous time speech signal. thus x(k) is the sequence of speech sample. It is applied to analyzer. The analyzer determines parameter for the synthesizer. The analyzer parameter and the error signal is multiplied and transmitted. this signal is called LPC.

24.whai is the limitation of delta modulation? (NOV/DEC2015)

Delta modulation transmits only one bit per sample.

Step size δ should be constant

25.what is APF and APB?(NOV/DEC2015)

Adaptive Prediction Forward

Adaptive Prediction Backward

PART-B

1. Explain Differential pulse code modulation transmitter and receiver and SNR improvement in DPCM
2. Explain Adaptive Differential pulse code modulation
3. Explain Delta Modulation and its SNR Calculation
4. Explain Adaptive Delta modulation with waveform
5. Explain Linear predictive coding Transmitter and receiver
6. Explain the concept of predictor filtering of signals in digital communication
7. What is the drawback of delta modulation? & how it is to improve& explain in briefly.
8. Derive SNR of DPCM and DM and give its significance
9. Express the equations for the design of linear predictive coding in digital communications
10. Explain the principles of ADPCM and ADM in detail

UNIT III BASEBAND TRANSMISSION

1. What is Line Code?

In telecommunication, a line code (also called digital baseband modulation or digital baseband transmission method) is a code chosen for use within a communications system for baseband transmission purposes. Line coding is often used for digital data transport.

2. Define line coding (MAY/JUN2016)

Line coding consists of representing the digital signal to be transported by an amplitude- and time-discrete signal that is optimally tuned for the specific properties of the physical channel (and of the receiving equipment). The waveform pattern of voltage or current used to represent the 1s and 0s of a digital data on a transmission link is called line encoding.

3. What are the common types of line encoding? (MAY/JUN2016)

The common types of line encoding are unipolar, polar,bipolar, and Manchester encoding are unipolar, polar,bipolar, and Manchester encoding.

4. What is Return-to-zero (RZ) line code?

Return-to-zero (RZ) describes a line code used intelecommunications signals in which the signal drops (returns) to zero between each pulse. This takes place even if a number of consecutive 0s or 1s occur in the signal. The signal is self-clocking.

5. Draw the wave form of Return-to-zero (RZ) line code

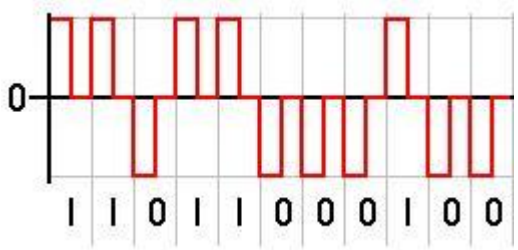

6. What is Return to zero, inverted?

Return-to-zero, inverted (RZI) is a method of mapping for transmission. The two-level RZI

signal has a pulse (shorter than a clock cycle) if the binary signal is 0, and no pulse if the binary signal is 1. It is used (with a pulse 3/16 of a bit long) by the IrDA serial infrared (SIR) physical layer specification. Required bandwidth for this kind of modulation is: BW = R (data rate)

7. What is non-return-to-zero (NRZ?)

A non-return-to-zero (NRZ) line code is abinary code in which 1s are represented by one significant condition(usually a positive voltage) and 0s are represented by some other significant condition (usually a negative voltage), with no other neutral or rest condition. The pulses have more energy than areturn-to-zero (RZ) code.

8. What is bipolar non-return-to-zero level?

"One" is represented by one physical level (usually a positive voltage), while "zero" is represented by another level (usually a negative voltage). In clock language, in bipolar NRZ-Level the voltage "swings" from positive to negative on the trailing edge of the previous bit clock cycle.An example of this is RS-232, where "one" is −12 V to −5 V and "zero" is +5 V to +12 V.

9. What is unipolar non-return-to-zero level (NOV/DEC2016)

Unipolar non-return-to-zero level "One" is represented by one physical level (such as a DC bias on the transmission line), while "zero" is represented by another level (usually a negative voltage).

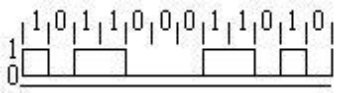

10. What is Non return to zero, inverted (NRZI)

Non return to zero, inverted (NRZI) is a method of mapping a binary signal to a physical signal for transmission over some transmission media. The two level NRZI signal has a transition at a clock boundary if the bitbeing transmitted is a logical 1, and does not have a transition if the bit being transmitted is a logical 0.

11. What is Manchester Coding?

Manchester coding (also known as phase encoding, or PE) is a line code in which the encoding of each data bit has at least one transition and occupies the same time. It therefore has no DC component, and is self-clocking, which means that it may be inductively or capacitively coupled, and that a clock signal can be recovered from the encoded data. As a result, electrical connections using a Manchester code are easily galvanically isolated using a network isolator—a simple one-to-one isolation transformer.

12. Draw the waveforms of Manchester coding

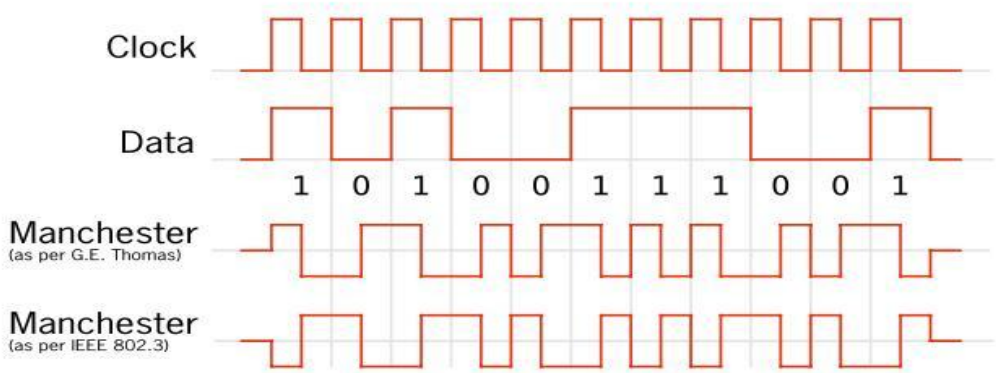

13. What are the requirements of Line Coding?

Small transmission bandwidth

- Power efficiency: as small as possible for required data rate and error probability
- Error detection/correction
- Suitable power spectral density, e.g., little low frequency content
- Timing information: clock must be extracted from data
- Transparency: all possible binary sequences can be transmitted

14. What are the factors of PSD of line codes?

Input PSD depends on

- pulse rate (spectrum widens with pulse rate)
- pulse shape (smoother pulses have narrower PSD)
- pulse distribution

15. What is ISI? What are the causes of ISI?(MAY/JUN2016)

Intersymbol interference (ISI) is a form of distortion of a signal in which one symbol interferes with subsequent symbols. This is an unwanted phenomenon as the previous symbols have similar effect as noise, thus making the communication less reliable. ISI is usually caused by multipath propagation or the inherent non-linear frequency response of a channel causing successive symbols to "blur" together.

16. What is nyquist criteria?

The Nyquist ISI criterion describes the conditions which, when satisfied by a communication channel(including responses of transmit and receive filters), result in nointersymbol interference or ISI. It provides a method for constructing band-limited functions to overcome the effects of intersymbol interference.

17. Draw eye pattern

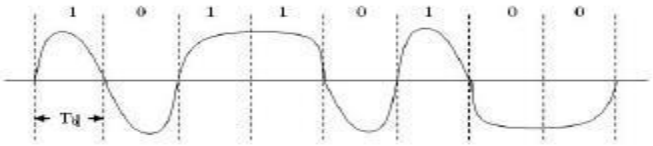

We get superposition of successive symbol intervals to produce eye pattern as shown below.

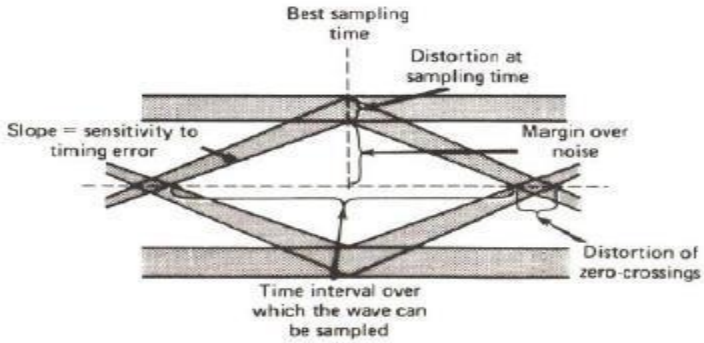

Interpretation of eye pattern

18. What are the effects of eye pattern?

An eye pattern provides a great deal of information about the performance of the pertinent system.

- The width of the eye opening defines the time interval over which the received wave can be sampled without error from ISI. It is apparent that the preferred time for sampling is the instant of time at which the eye is open widest.
- The sensitivity of the system to timing error is determined by the rate of closure of the eye as the sampling time is varied.
- The height of the eye opening, at a specified sampling time, defines the margin over noise.

19 What is eye pattern?

In telecommunication, an eye pattern, also known as an eye diagram, is anoscilloscope display in which a digital data signal from a receiver is repetitively sampled and applied to the vertical input, while the data rate is used to trigger the horizontal sweep. It is so called because, for several types of coding, the pattern looks like a series of eyes between a pair of rails. It is an experimental tool for the evaluation of the combined effects of channel noise and intersymbol interference on the performance of a baseband pulse-transmission system.

20. What are the different types of equalizer in DC

- Linear Equalizer: processes the incoming signal with a linear filter
- MMSE equalizer: designs the filter to minimize E[|e|2], where e is the error signal, which is the filter output minus the transmitted signal.
- Zero Forcing Equalizer: approximates the inverse of the channel with a linear filter.
- Decision Feedback Equalizer: augments a linear equalizer by adding a filtered version of previous symbol estimates to the original filter output.
- Blind Equalizer: estimates the transmitted signal without knowledge of the channel statistics, using only knowledge of the transmitted signal's statistics.

21. What is adaptive Equalizer?

Adaptive Equalizer: is typically a linear equalizer or a DFE. It updates the equalizer parameters (such as the filter coefficients) as it processes the data. Typically, it uses the MSE cost function; it assumes that it makes the correct symbol decisions, and uses its estimate of the symbols to compute e, which is defined above.

22. Compare M-ary PSK and M-ary QAM. (NOV/DEC2015)

The distance between the message points of M ary PSK is smaller than the distance between the message points of M-ary QAM.

PART-B

1. Explain the properties of line codes
2. Explain Power Spectral Density of Unipolar / Polar RZ & NRZ
3. Explain power spectral density of Bipolar NRZ and Manchester
4. What is eyepattern and explain the concept of Inter symbol interference
5. Explain Nyquist criterion for distortionless transmission
6. Explain pulse shaping process in base band transmission system
7. Explain correlative coding and m-aryschemes

8. Explain different types of equalization methods in base band transmission system
9. Explain the different types of line codes with its wave forms and give its significance
10. Explain correlative coding in base band transmission systems and give its advantages and disadvantages

UNIT IV DIGITAL MODULATION SCHEME

1. What is bit rate and symbol rate?

Bit Rate and Symbol Rate In digital communications, information is transmitted by randomly choosing a waveform in a set of waveforms, and by transmitting it through the channel. Consider a set of M waveforms, and suppose that the waveforms are chosen with uniform probability. With these assumptions, log2 M bits are associated to the transmission of one waveform (one symbol). Transmission is repeated in time, sending through the channel a waveform every T seconds. The bit rate and the symbol rate are Rb = log2 MT bit/second, Rs = 1T symbol/second.

2. Define Signal Space

Let si(t) denote the i-th complex waveform, and
let S = {s1(t), s2(t), · · · , sM(t)}
denote the set of waveforms, which is often called signal set.

3. How the Passband signals can be represented

Passband signals can be represented in three forms

- Magnitude and Phase representation
- Quadrature representation
- Complex Envelop representation

4. Draw BPSK Modulated wave

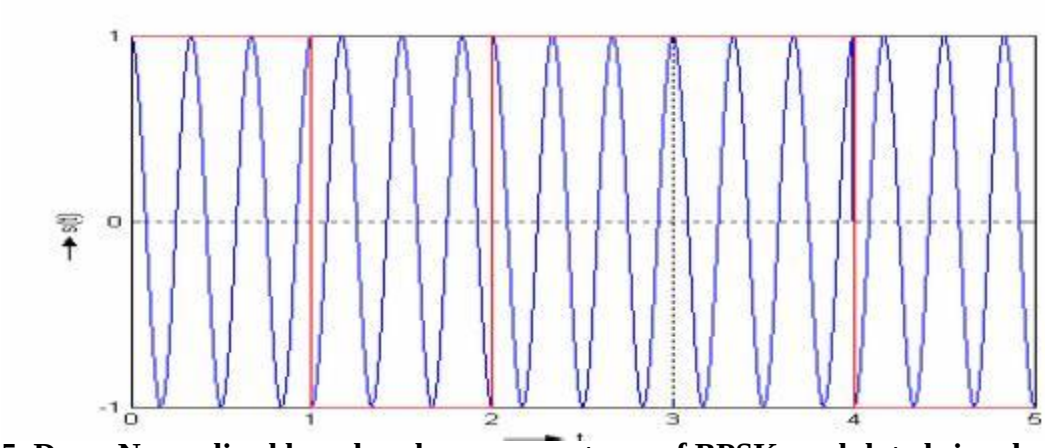

5. Draw Normalized base band power spectrum of BPSK modulated signal

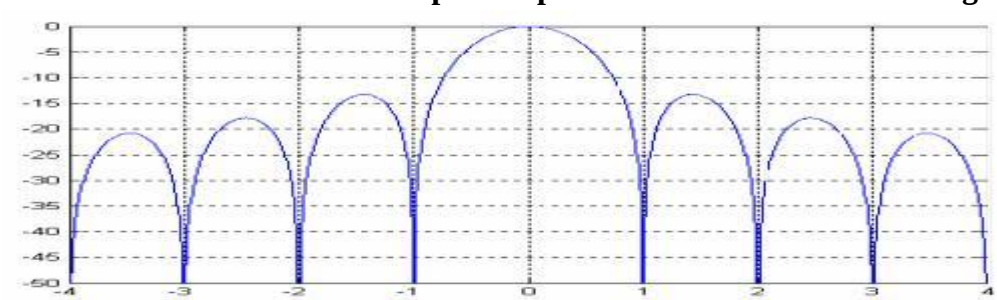

6. Define PSK

Phase-shift keying (PSK) is a digital modulation scheme that conveys data by changing, or modulating, the phase of a reference signal (the carrier wave).

7. What are three major classes of digital modulation?

The three major classes of digital modulation techniques used for transmission of digitally represented data:

- Amplitude-shift keying (ASK)
- Frequency-shift keying (FSK)
- Phase-shift keying (PSK)

8. Draw Constellation diagram example for BPSK.

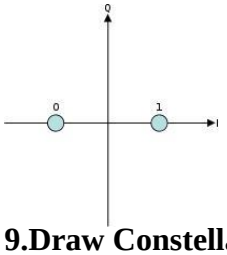

9.Draw Constellation diagram for QPSK with Gray coding.

Each adjacent symbol only differs by one bit.

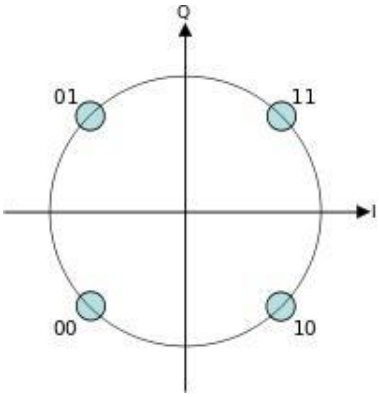

10.Draw the block diagram of QPSK Transmitter

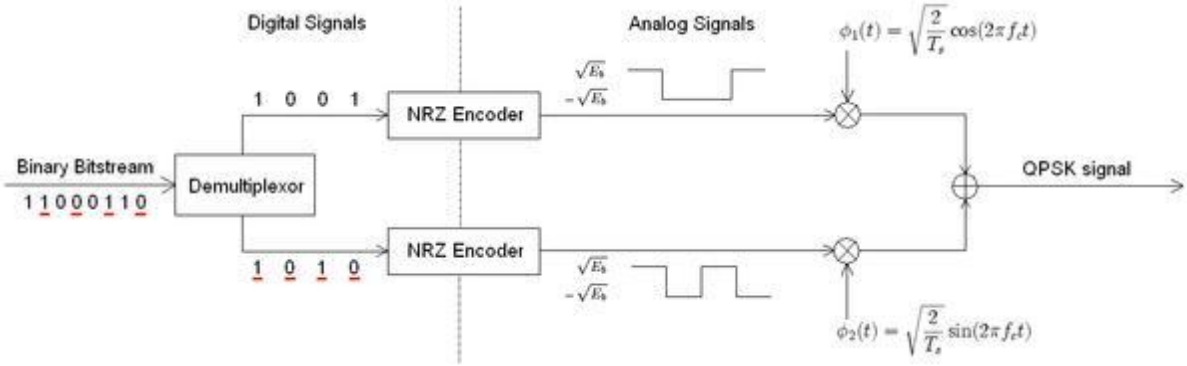

11. Draw the block diagram of QPSK Receiver

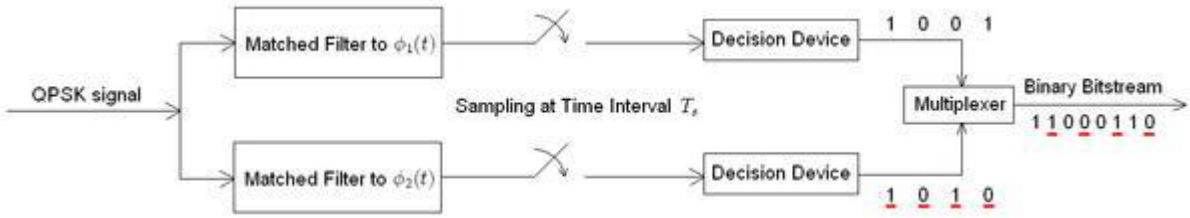

12.Give BER for QPSK

$$P_b = Q\left(\sqrt{\frac{2E_b}{N_0}}\right).$$

The symbol error rate is given by:

$$P_s = 1 - (1 - P_b)^2$$
$$= 2Q\left(\sqrt{\frac{E_s}{N_0}}\right) - \left[Q\left(\sqrt{\frac{E_s}{N_0}}\right)\right]^2$$

13. Draw Bit-error rate curves for BPSK, QPSK, 8-PSK and 16-PSK, AWGN channel.

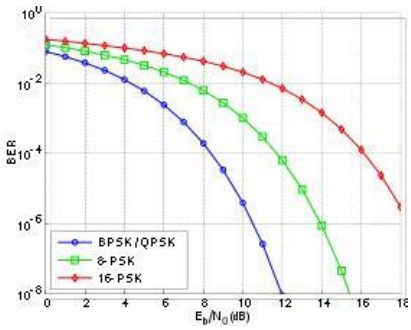

14. What is FSK

Frequency-shift keying (FSK) is a frequency modulation scheme in which digital information is transmitted through discrete frequency changes of a carrier wave.The simplest FSK is binary FSK (BFSK). BFSK uses a pair of discrete frequencies to transmit binary (0s and 1s) information. With this scheme, the "1" is called the mark frequency and the "0" is called the space frequency. The time domain of an FSK modulated carrier is illustrated in the figures to the right.

15.Draw the wave form of FSK

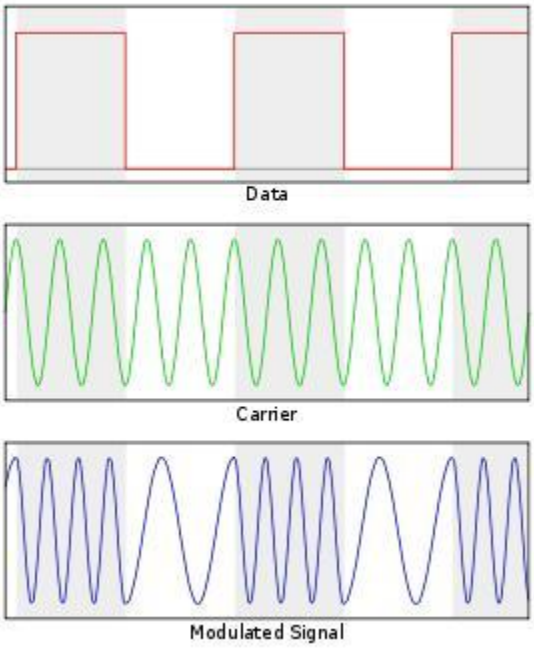

16. What is QAM

Quadrature amplitude modulation (QAM) is both an analog and a digital modulationscheme. It conveys two analog message signals, or two digital bit streams, by changing (modulating) the amplitudes of two carrier waves, using the amplitude-shift keying (ASK) digital modulation scheme or amplitude modulation (AM) analog modulation scheme. The two carrier waves, usually sinusoids, are out of phase with each other by 90°

17. Draw QAM Transmitter

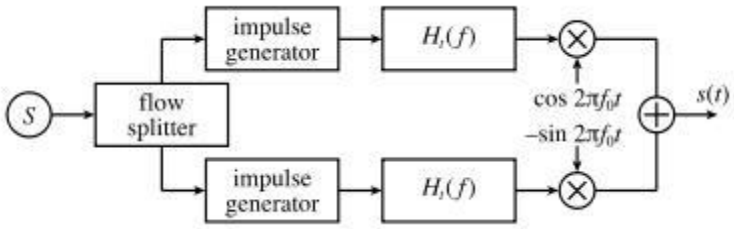

18. Draw the receiver of QAM

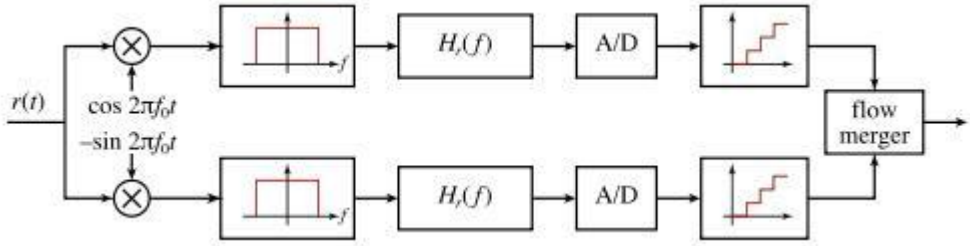

19.What are Rectangular QAM constellations

Rectangular QAM constellations are, in general, sub-optimal in the sense that they do not maximally space the constellation points for a given energy. However, they have the considerable advantage that they may be easily transmitted as two pulse amplitude modulation (PAM) signals on quadrature carriers, and can be easily demodulated. The non-square constellations, dealt with below, achieve marginally better bit-error rate (BER) but are harder to modulate and demodulate.

20. What are the noises in QAM

The following three are most significant:

- Carrier/interference ratio
- Carrier-to-noise ratio
- Threshold-to-noise ratio

21.What is the principle of DPSK

Differential phase shift keying (DPSK) is a common form of phase modulation that conveys data by changing the phase of the carrier wave. As mentioned for BPSK and QPSK there is an ambiguity of phase if the constellation is rotated by some effect in the communications channel through which the signal passes. This problem can be overcome by using the data to change rather than set the phase.

PART-B

1. Explain Generation and detection of BPSK and derive its PSD and BER
2. Explain BFSK Transmitter and receiver and derive its power density and spectrum
3. Explain QPSK and QAM with its necessary input and output waveforms
4. Explain Carrier synchronization in Digital modulation scheme
5. Draw and Explain the different structures of non-coherent receivers
6. Explain DPSK and its principle with its necessary diagrams.
7. Explain Gram Schmidth orthogonalization procedure and give its expression
8. Derive BER of coherent BPSK and BFSK
9. Differentiate BPSK, BFSK, QPSK and QAM

UNIT V ERROR CONTROL CODING

1. What are the objectives of channel code?

- To have the capability to detect and correct erros
- To be able to keep the overhead of error control and correction as minimum as practicable
- To be able to encode the symbol in a fast and efficient way
- To be able to decode the symbol in a fast and efficient way

2. What is meant by systematic code

In block codes, each block of k information bits is encoded into a block of n bits (n>k). this n bit block is called as codeword. The n-k check bits are derived from the message bits and added to them. When the k information bits appear at the beginning of a codeword, the code is called as systematic code

3. What is called as nearest neighbor decoding

The logical step decide in favour of the codeword whose hamming distance from the received word is minimum. This strategy is called as nearest neighbourdcoding as the picking of codeword nearest to the received words in terms of hamming distance

4. What is meant by cyclic redundancy check codes?

The codes which are good at detecting burst of errors and block codes are good at detecting and correcting random errors such as errors occurring at random positions of the codewords, hence the codes specially designed for detecting burst errors are called as CRC Codes

5.Why a large block length is important in block codes?

A large block length is important in block codes for

- Many of the good codes that have large distance properties are of large block lengths
- Larger block length implies smaller encoding overhead

6. Define transmission or channel efficiency and channel capacity

It may be defined as the ratio between actual transinformation to maximum transinformation. Channel capacity gives the maximum possible information transmitted when one symbol is transmitted.

7.What are the desirable properties of line code

- DC component
- Self synchronization
- Error detection
- Bandwidth compression
- Differential encoding
- Noise immunity
- Spectral compactability with channel
- Transparency

8. Define cyclic code

A linear code is called cyclic code if every cyclic shift of the code vector produces some other code vector. This definition includes two fundamental properties namely linearity and cyclic property

9. Define code rate and channel data rate

Code rate is the ratio of message bits to the encoder output bits and channel data rate is the bit rate at the output of encoder which is the ratio of product of n bits and bit rate of the encoder to the message bits

10. Define syndrome

When some errors are present in received vector Y, then it will not be from valid code vectors When $Y H^T$ is non zero, some errors are present in Y. the non zero output of the product $Y H^T$ is called as syndrome

11.What is hamming distance?

The hamming distance between two code vectors is equal to the number of elements in which they differ. For example, let the two code words be,

X = (101) and Y= (110)

These two code words differ in second and third bits. Therefore the hamming distance between X and Y is two.

12. Define code efficiency.

The code efficiency is the ratio of message bits in a block to the transmitted bits for that block by the encoder i.e.,Code efficiency= (k/n)

k=message bits

n=transmitted bits.

13. What is meant by systematic and non-systematic codes?

In a Systematic block code, message bits appear first and then check bits. In the non-systematic code, message and check bits cannot be identified in the code vector.

14. What is meant by linear code? (May/June 2016)

A code is linear if modulo-2 sum of any two code vectors produces another code vector. This means any code vector can be expressed as linear combination of other code vectors.

15. What are the error detection and correction capabilities of hamming codes?

The minimum distance (dmin) of hamming codes is „3". Hence it can be used to detect double errors or correct single errors. Hamming codes are basically linear block codes with dmin =3.

16. What is meant by cyclic codes?

Cyclic codes are the subclasses of linear block codes. They have the property that a cyclic shift of one codeword produces another code word.

17.How syndrome is calculated in Hamming codes and cyclic codes?

In hamming codes the syndrome is calculated as,

$S=YH^T$

Here Y is the received and H^T is the transpose of parity check matrix.

18.What is BCH code?

BCH codes are most extensive and powerful error correcting cyclic codes. The decoding of BCH codes is comparatively simpler. For any positive integer „m" and „t"

(where $t<2^{m-1}$)there exists a BCH code with following parameters: Block length: $n= 2^{m-1}$

Number of parity check bits : n-k<=mt

Minimum distance: dmin>=2t+1

19. Define constraint length in convolutional codes? (May/June 2016)

Constraint length is the number of shifts over which the single message bit can influence the encoder output. This expressed in terms of message bits.

20. What is difference between block codes and convolutional codes?

Block codes takes"k" number of bits simultaneously form „n"-bit code vector. This code vector is also called block. Convolutional code takes one message bits at a time and generates two or more encoded bits. Thus convolutional codes generate a string of encoded bits for input message string.

21. Define constraint length in convolutional code?

Constraint length is the number of shift over which the single message bit can influence the encoder output. It is expressed in terms of message bits.

22. Define free distance and coding gain.

Free distance is the minimum distance between code vectors. It is also equal to minimum weight of the code vectors.

Coding gain is used as a basis of comparison for different coding methods. To achieve the same bit error rate the coding gain is defined as,
A= (Eb/No)encoded (Eb/No) coded
For convolutional coding, the coding gain is given as,
A = rdf /2
Here „r" is the code rate
And „df is the free distance.

23. What is convolution code?

Fixed number of input bits is stored in the shift register & they are combined with thehelp of mod 2 adders. This operation is equivalent to binary convolution coding.

25. What are the advantages of convolutional codes?

Advantages:

1. The decoding delay is small in convolutional codes since they operate o smaller blocks of data.
2. The storage hardware required by convolutional decoder is less since the block sizes are smaller.

Disadvantages:

1. Convolutional codes are difficult to analyze since their analysis is complex.
2. Convolutional codes are not developed much as compared to block codes.

26. Define sates of encoder?

The constraint length of the given convolutional encoder is K=2. Its rate is ½ means for single message bit input, two bits x1 and x2 are encoded at the output.
„S1" represents the input message bit and S2 stores the previous message bit. Since only one previous message bit is stored, this encoder can have states depending

upon this stored message bit. Let"s represent, S2
= 0
and S2 = 1 state „b"

27. Compare between code tree and trellis diagram?

Sr. No.	Code tree	Trellis diagram
1	Code tree indicates flow of the coded signal along the nodes of the tree.	Trellis diagram indicates transitions from current to next states.
2.	Code tree is lengthy way of representing coding process.	Code trellis diagram is shorter or compact way of representing coding process.

28. Write the futures of BCH Codes?

BCH codes are most extensive and powerful error correcting cyclic codes. The decoding of BCH codes is comparatively simpler.The decoding schemes of BCH codes can be implemented on digital computer. Because of software implementation of decoding schemes they are quite flexible compared to hardware implementation of other schemes.

29. What is Golay codes?

Golay code is the (23,12) cyclic code whose generating polynomial is, G(p)

$= p^{11}+p^{9}+p^{7}+p^{6}+p^{5}+p+1$

This code has minimum distance of dmin = 7. This code can correct upto 3 errors. But Golay code cannot be generalized to other combinations of n and k.

30. List the properties of cyclic code.(MAY/JUN2016)

Linearity property : $X_3 = X_1$ (EXOR) X_2

Cyclic property : $X = \{ x_{n-1}, x_{n-2}, \ldots\ldots\ldots x_1, x_0\}$

31. state channel coding theorem.(MAY/JUN2016)

The noisy-channel coding theorem (sometimes Shannon's theorem), establishes that for any given degree of noise contamination of a communication channel, it is possible to communicate discrete data (digital information) nearly error-free up to a computable maximum rate through the channel.

PART B

1. Explain Block codes and linear block code in detail
2. Find a generator polynomial g(x) for a (7,4) cyclic code. Also find all the code vectors of this code and also construct a systematic (7,4) cyclic code using the generator polynomials
3. Explain a) Cyclic Redundancy check codes b) Bose-ChaudhuriHocquenghem Codes c) Reed-Solomon codes.
4. Explain convolutional codes in detail using convolutional encoder and draw code tree for the 1/3 convolutional encoder
5. Explain Viterbi algorithm with suitable example
6. Explain Shannon Channel Coding theorem and its conept in detail
7. Define channel coding and explain different types of channel coding theorem and give its necessary expression
8. Explain the advantages and disadvantages of block codes and cyclic codes
9. Differentiate block codes, cyclic codes and convolutional codes and give its merits and demerits
10. Draw and explain viterbi decoder and give its properties and operation

B.E./B.Tech. DEGREE EXAMINATION, NOVEMBER/DECEMBER 2011.
Fifth Semester

Electronics and Communication Engineering

EC 2301 — DIGITAL COMMUNICATION
(Regulation 2008)

(Common to PTEC 2301 – Digital Communication for B.E. (Part-Time) Fourth Semester Electronics and Communication Engineering Regulation – 2009)

Time : Three hours Maximum : 100 marks

Answer ALL questions.

PART A — (10x 2 = 20 marks)

1. Draw the basic block diagram of digital communication system.

2. Define Half power bandwidth.

3. Compare uniform and non-uniform quantization.

4. What is meant by temporal waveform coding?

5. Mention the properties of cyclic code.

6. Draw the RZ-Bipolar line code format for the information { 10110 }.

7. State Nyquist criterion for zero ISI.

8. The presence of AWGN that has a variance of 0.1 V2. Find the optimum detection threshold γ ofMAP detector, if the a priori probability is

9. Why is PSK always preferable over ASK in coherent detection?

10. Differentiate between coherent and non-coherent detection.

PART B — (5 x 16 = 80 marks)

11. (a) Explain in detail the Gram-Schmidt orthogonalisation procedure. (16)

Or

(b) Discuss in detail the different mathematical models of

communication channel. (16)

12. (a) (i) A television signal has a bandwidth of 4.5 MHz. This signal is sampled, quantized and

binary coded to obtain a PCM signal.

(1)Determine the sampling rate if the signal is to be sampled at a rate 20% above Nyquist rate,

(2)If the samples are quantized into 1024 levels, determine the number of binary pulses required to encode each sample.

(3)Determine the binary pulse rate of the binary coded signal, and the minimum bandwidth required to transmit this signal. (12)

(ii) Compare different speech coding techniques. (4)

Or

(b) (i) Explain the following sampling techniques with necessary waveforms.

(1) impulse sampling (6)
(2) natural sampling. (6)

(ii) Write a short note on spectral waveform encoding. (4)

13. (a) (i) Construct a single error correcting (7, 4) linear block code and

the corresponding decoding table. (10)

(ii) Briefly describe the concept of error-free communication. (6)

Or

(b) (i) List and explain the properties of line codes. (8)

(ii) Determine the generator polynomial G(X) for a (7, 4) cyclic code, and find code

vectors for the following data vectors 1010,1111, and 1000.
(8)

14. (a) (i) In a certain binary communication system that uses Nyquist

criterion pulses, a received pulse Determine tap settings of a three - tap equalizer.

(8)

(ii) Explain the working principle of maximum likelihood detector.(8)

Or

(b) Derive the expression for error probability of on-off and polar signaling. (16)

15. (a) Explain the concept of coherent BPSK with transmitter and receiver block diagrams and obtain the expression for probability of error. (16)

Or

(b) A set of binary data is sent at the rate of Rb - 100 kbps over achannel with 60 dB transmission loss and power spectral density η10 −12W/Hz at the receiver. Determine the transmitted power for abit error probability Pe = 10 −3 for the following modulation schemes

(i) Coherent ASK

(ii) Non-coherent ASK
(iii) FSK

(iv) PSK
(v) DPSK

(vi) 16 QAM. (16)

Reg. No. :

Question Paper Code : 27199

B.E./B.Tech. DEGREE EXAMINATION, NOVEMBER/DECEMBER 2015.

Fifth Semester

Electronics and Communication Engineering

EC 6501 — DIGITAL COMMUNICATION

(Regulations 2013)

Time : Three hours Maximum : 100 marks

Answer ALL questions.

PART A — (10 × 2 = 20 marks)

1. State sampling theorem for band-limited signals and the filter to avoid alaising.
2. Write the two fold effects of Quantization Process.
3. Define APF and APB.
4. Write the limitations of delta modulation.
5. List the properties of syndrome.
6. Compare M-ary PSK and M-ary QAM.
7. Draw a block diagram of a coherent BFSK receiver.
8. Distinguish BPSK and QPSK techniques.
9. State channel coding theorem.
10. List the properties of cyclic codes.

PART B — (5 × 16 = 80 marks)

11. (a) Describe the process of sampling and how the message signal is reconstructed from it's samples. Also illustrate the effect of aliasing with neat sketch. (16)

Or

(b) Describe PCM waveform coder and decoder with neat sketch and list the merits compared with analog coders. (16)

12. (a) (i) Describe and illustrate Delta modulation and its quantization error. (8)

(ii) Explain how Adaptive delta modulation performs better and gains more SNR than Delta modulation. (8)

Or

(b) Illustrate how the adaptive time domain coder codes the speech at low bit rate and compare it with the frequency domain coder. (16)

13. (a) (i) Describe modified duobinary coding technique and its performance by illustrating it's frequency and impulse responses. (10)

(ii) Determine the power spectral density for NRZ bipolar and unipolar data formats. Assume that 1s and 0s in the input binary data occur with equal probability. (6)

Or

(b) (i) Describe how eye pattern illustrates the performance of a data transmission system with respect to inter symbol interference with neat sketch. (10)

(ii) Illustrate the modes of operation of an adaptive equalizer with neat block diagram. (6)

14. (a) Illustrate the transmitter, receiver and signal space diagram of Quadrature Phase Shift Keying and describe how it reproduces the original sequence with the minimum probability of symbol error with neat sketch. (16)

Or

(b) Illustrate the transmitter, receiver and the generation of the non coherent version of PSK with neat sketch. (16)

15. (a) For a systematic linear block code, the three parity check digits P_1, P_2, P_3 are given by $Pk_{,n-k} = \begin{bmatrix} 101 \\ 111 \\ 110 \\ 011 \end{bmatrix}$

(i) Construct generated matrix

(ii) Construct code generated by the matrix

(iii) Determine error correcting capacity

(iv) Decode the received words with an example. (16)

Or

(b) A convolution code is described by g1 = [1 0 0]; g2 = [1 0 1]; g3 = [1 1 1]

(i) Draw the encoder corresponding to this code.

(ii) Draw the state transition diagram for this code

(iii) Draw the Trellis diagram

(iv) Find the transfer function. (16)

Reg. No. | | | | | | | | | | | | |

Question Paper Code : 57291

B.E/B.Tech. DEGREE EXAMINATION, MAY/JUNE 2016

Fifth Semester

Electronics and Communication Engineering

EC 6501 – Digital Communication

(Regulations 2013)

Time : Three Hours **Maximum : 100 Marks**

Answer ALL questions.

PART – A (10 × 2 = 20 Marks)

1. What is aliasing ?
2. What is companding ? Sketch the input-output characteristics of a compressor and an expander.
3. What are the advantages of delta modulator ?
4. What is a linear predictor ? On what basis are the predictor coefficients determined ?
5. What are line codes ? Name some popular line codes.
6. What is ISI and what are the causes of ISI ?
7. Distinguish between coherent and non-coherent reception.
8. What is QPSK ? Write the expression for the signal set of QPSK.
9. What is a linear code ?
10. What is meant by constraint length of a convolutional encoder ?

PART – B (5 × 16 = 80 Marks)

11. (a) (i) State the low pass sampling theorem and explain reconstruction of the signal from its samples. (9)

(ii) The signal $x(t) = 4 \cos 400 \pi t + 12 \cos 360 \pi t$ is ideally sampled at a frequency of 300 samples per second. The sampled signal is passed through a unit gain low pass filter with a cut off frequency of 220 Hz. List the frequency components present at the output of the low pass filter ? (7)

OR

(b) (i) Explain pulse code modulation system with neat block diagram. (10)

(ii) What is TDM ? Explain the difference between analog TDM and digital TDM. (6)

12. (a) (i) Draw the block diagram of ADPCM system and explain its function. (10)

(ii) A delta modulator with a fixed step size of 0.75 V, is given a sinusoidal message signal. If the sampling frequency is 30 times the Nyquist rate, determine the maximum permissible amplitude of the message signal if slope overload is to be avoided. (6)

OR

(b) (i) Draw the block diagram of an adaptive delta modulator with continuously variable step size and explain. (10)

(ii) Compare PCM system with delta modulation system. (6)

13. (a) (i) Sketch the power spectra of (a) Polar NRZ and (b) bipolar RZ signals. (8)

(ii) Compare the various line coding techniques and list their merits and demerits. (8)

OR

(b) (i) Draw the block diagram of duo binary signaling scheme without and with precoder and explain. (9)

(ii) Explain the adaptive equalization with block diagram. (7)

14. (a) Explain the generation and detection of a coherent binary PSK signal and derive the power spectral density of binary PSK signal and plot it. (16)

OR

(b) Explain the non-coherent detection of FSK signal and derive the expression for probability of error. (16)

(a) Consider a linear block code with generator matrix **(3 + 3 + 6 + 4)**

$$G = \begin{bmatrix} 1 & 1 & 0 & 1 & 0 & 0 & 0 \\ 0 & 1 & 1 & 0 & 1 & 0 & 0 \\ 1 & 1 & 1 & 0 & 0 & 1 & 0 \\ 1 & 0 & 1 & 0 & 0 & 0 & 1 \end{bmatrix}$$

(i) Determine the parity check matrix.

(ii) Determine the error detecting and capability of the code.

(iii) Draw the encoder and syndrome calculation circuits.

(iv) Calculate the syndrome for the received vector r = [1 1 0 1 0 1 0].

OR

(b) (i) The generator polynomial of a (7, 4) cyclic code is $1 + X + X^3$. Develop encoder and syndrome calculator for this code. **(8)**

(ii) Explain Viterbi decoding algorithm for convolutional code. **(8)**

57291

Reg. No. : [ ]

Question Paper Code : 80342

B.E./B.Tech. DEGREE EXAMINATION, NOVEMBER/DECEMBER 2016.

Fifth Semester

Electronics and Communication Engineering

EC 6501 — DIGITAL COMMUNICATION

(Regulations 2013)

Time : Three hours

Answer ALL questions.

PART A — (10 × 2 = 20 marks)

1. Define companding.
2. What is meant by aliasing?
3. What is the need of prediction filtering?
4. How to overcome the slope overlap?
5. Define correlative level coding.
6. For the binary data 01101001 draw the unipolar and RZ signal.
7. Distinguish coherent vs non coherent digital modulation techniques.
8. Draw a block diagram of a coherent BFSK receiver.
9. Generate the cyclic code for (n, k) syndrome calculator.
10. Define channel coding theorem.

PART B — (5 × 16 = 80 marks)

11. (a) Illustrate and describe the types of quantizer? Describe the midtread and midrise type characteristics of uniform quantizer with a suitable diagram. (16)

Or

(b) Draw and explain the TDM with its applications. (16)

12. (a) Describe delta modulation system in detail with a neat block diagram. Also, Illustrate the two forms of quantization error in delta modulation. (16)

Or

(b) Describe Adaptive Delta Modulation with neat sketch and compare it with Delta Modulation of ADPCM. (16)

13. (a) Explain how Nyquist's Criterion eliminates interference in the absence of noise for distortion-less baseband binary transmission. (16)

Or

(b) Describe how eye pattern is helpful to obtain the performance of the system in detail with a neat sketch. (16)

14. (a) (i) Describe the generation and detection of Coherent binary PSK Signals. (10)

(ii) Illustrate the power spectra of binary PSK signal. (6)

Or

(b) (i) Describe the generation and detection of Coherent QPSK Signals. (12)

(ii) Illustrate the power spectra of QPSK signal. (4)

15. (a) (i) Describe the cyclic codes with the linear and cyclic property. Also represent the cyclic property of a code word in polynomial notation. (12)

(ii) List the different types of errors detected by CRC code. (4)

Or

(b) (i) Describe how the errors are corrected using Hamming code with an example. (12)

(ii) The code vector [1110010] is sent, the received vector is [1100010]. Calculate the syndrome. (4)

EC6502 PRINCIPLES OF DIGITAL SIGNAL PROCESSING L T P C
3 1 0 4

- To learn discrete Fourier transform and its properties
- To know the characteristics of IIR and FIR filters learn the design of infinite and finite impulse response filters for filtering undesired signals
- To understand Finite word length effects
- To study the concept of Multirate and adaptive filters

UNIT I DISCRETE FOURIER TRANSFORM 9

Discrete Signals and Systems- A Review – Introduction to DFT – Properties of DFT – Circular Convolution - Filtering methods based on DFT – FFT Algorithms –Decimation in time Algorithms, Decimation in frequency Algorithms – Use of FFT in Linear Filtering.

UNIT II IIR FILTER DESIGN 9

Structures of IIR – Analog filter design – Discrete time IIR filter from analog filter – IIR filter design by Impulse Invariance, Bilinear transformation, Approximation of derivatives – (LPF, HPF, BPF, BRF) filter design using frequency translation.

UNIT III FIR FILTER DESIGN 9

Structures of FIR – Linear phase FIR filter – Fourier series - Filter design using windowing techniques (Rectangular Window, Hamming Window, Hanning Window), Frequency sampling techniques – Finite word length effects in digital Filters: Errors, Limit Cycle, Noise Power Spectrum.

UNIT IV FINITE WORDLENGTH EFFECTS 9

Fixed point and floating point number representations – ADC –Quantization- Truncation and Rounding errors - Quantization noise – coefficient quantization error – Product quantization error - Overflow error – Round off noise power - limit cycle oscillations due to product round off and overflow errors – Principle of scaling

UNIT V DSP APPLICATIONS 9

Multirate signal processing: Decimation, Interpolation, Sampling rate conversion by a rational factor – Adaptive Filters: Introduction, Applications of adaptive filtering to equalization

TOTAL (L: 45+T: 15): 60PERIODS

TEXT BOOK:

1. John G. Proakis & Dimitris G.Manolakis, “Digital Signal Processing – Principles, Algorithms & Applications”, Fourth Edition, Pearson Education / Prentice Hall, 2007.

REFERENCES:

1. Emmanuel C...Ifeachor, & Barrie.W.Jervis, “Digital Signal Processing”, Second Edition, Pearson Education / Prentice Hall, 2002.
2. Sanjit K. Mitra, “Digital Signal Processing – A Computer Based Approach”, Tata Mc Graw Hill, 2007.
3. A.V.Oppenheim, R.W. Schafer and J.R. Buck, “Discrete-Time Signal Processing”, 8th Indian Reprint, Pearson, 2004.
4. Andreas Antoniou, “Digital Signal Processing”, Tata Mc Graw Hill, 2006.

UNIT I DISCRETE FOURIER TRANSFORM

Discrete Signals and Systems- A Review – Introduction to DFT – Properties of DFT – Circular Convolution - Filtering methods based on DFT – FFT Algorithms –Decimation in time Algorithms, Decimation in frequency Algorithms – Use of FFT in Linear Filtering.

PART-A

1. **Define Signal.**
   A Signal is defined as any physical quantity that varies with time, space or any other independent variables.
2. **Define a system.**
   A System is a physical device (i.e., hardware) or algorithm (i.e., software) that performs an operation on the signal.
3. **What are the steps involved in digital signal processing?**
   - Converting the analog signal to digital signal, this is performed by A/D converter.
   - Processing Digital signal by digital system.
   - Converting the digital signal to analog signal, this is performed by D/A converter.
4. **Give some applications of DSP?**
   - Speech processing – Speech compression & decompression for voice storage system
   - Communication – Elimination of noise by filtering and echo cancellation.
   - Bio-Medical – Spectrum analysis of ECG,EEG etc.
5. **Write the classifications of DT Signals.**
   - Energy & Power signals.
   - Periodic & Non periodic signals.
   - Even & Odd signals.
6. **What is an Energy and Power signal?**
   Energy signal:
   A finite energy signal is periodic sequence, which has a finite energy but zero average power.
   Power signal:
   An Infinite energy signal with finite average power is called a power signal.
7. **What is Discrete Time Systems?**
   The function of DTS is to process a given input sequence to generate output sequence. In practical discrete time systems, all signals are digital signals, and operations on such signals also lead to digital signals. Such discrete time systems are called digital filter.
8. **Write the Various classifications of Discrete-Time systems.**
   - Linear & Non linear system.
   - Causal & Non Causal system.
   - Stable & Un stable system.
   - Static & Dynamic systems.

9. **Define Linear system**

A system is said to be linear system if it satisfies Super position principle. Let us consider x1(n) & x2(n) be the two input sequences & y1(n) & y2(n) are the responses respectively,

$$T[ax1(n) + bx2(n)] = a\,y1(n) + by2(n)$$

10. **Define Static & Dynamic systems**

When the output of the system depends only on the present input sample, then it is called static system, if the system depends past values of input then it is called dynamic system

11. **Define causal system.**

When the output of the system depends only on the present and past input sample, then it is called causal system, if the system depends on future values of input then it is called non-causal system

12. **Define Shift-Invariant system.**

If y(n) is the response to an input x(n), then the response to an input

X(n) = x(n-n0) then y(n) = y(n-n0)

When the system satisfies above condition then it is said to shift in variant, otherwise it is variant.

13. **Define impulse and unit step signal.**

Impulse signal I(n):

The impulse signal is defined as a signal having unit magnitude at n = 0 and zero for other values of n.

$$I(n) = \begin{cases} 1; & n = 0 \\ 0; & n \neq 0 \end{cases}$$

Unit step signal u(n):

The unit step signal is defined as a signal having unit magnitude for all values of $n \geq 0$

$$u(n) = \begin{cases} 1; & n \geq 0 \\ 0; & n < 0 \end{cases}$$

14. **What are FIR and IIR systems?**

The impulse response of a system consist of infinite number of samples are called IIR system & the impulse response of a system consist finite number of samples are called FIR system.

15. **What are the basic elements used to construct the block diagram of discrete time system?**

The basic elements used to construct the block diagram of discrete time Systems are Adder, Constant multiplier &Unit delay element.

16. **What are the different methods of evaluating inverse z-transform?**

- Partial fraction expansion
- Power series expansion
- Contour integration (Residue method)

17. **Define sampling theorem.**

A continuous time signal can be represented in its samples and recovered back if the sampling frequency $F_S \geq 2B$. Here 'F_S' is the sampling frequency and 'B' is the maximum frequency present in the signal.

18. **What are the properties of convolution?**

- Commutative property x(n) * h(n) = h(n) * x(n)

- Associative property $[x(n) * h_1(n)]*h_2(n) = x(n)*[h_1(n) * h_2(n)]$
- Distributive property $x(n) *[h_1(n)+h_2(n)] = [x(n)*h_1(n)]+[x(n) * h_2(n)]$

19. Define DTFT.

Let us consider the discrete time signal x(n).Its DTFT is denoted as X(w).It is given as $X(w)= x(n)e^{-jwn}$

20. State the condition for existence of DTFT?

The conditions are

- If x(n)is absolutely summable then |x(n)|<
- If x(n) is not absolutely summable then it should have finite energy for DTFT to exit.

21. List the properties of DTFT.

Periodicity, Linearity, Time shift, Frequency shift, Scaling, Differentiation in frequency domain, Time reversal, Convolution, Multiplication in time domain, Parseval's theorem

22. Define DFT.

DFT is defined as X(w)= x(n)e-jwn. Here x(n) is the discrete time sequence X(w) is the Fourier transform of x(n).

23. Define Twiddle factor.

The Twiddle factor is defined as $WN=e^{-j2 /N}$

24. Define Zero padding.

The method of appending zero in the given sequence is called as Zero padding.

PART-B

1. Perform circular convolution of the sequence using DFT and IDFT technique $x_1(n) = \{2,1,2,1\}$ $x_2 (n) = \{0,1,2,3\}$ (8)
2. Compute the DFT of the sequence x(n) = {1,1,1,1,1,1,0,0} (8)
3. From the first principles obtain the signal flow graph for computing 8 – point DFT using radix-2 DIT FFT algorithm. Using the above compute the DFT of sequence x(n) = {0.5,0.5,0.5,0.5,0,0,0,0} (16)
4. State and prove the circular convolution property of DFT.Compute the circular convolution of x(n) = {0,1,2,3,4} and h(n) = {0,1,0,0,0} (8)
5. Perform circular convolution of the sequence using DFT and IDFT technique $x_1(n) = \{1,1,2,1\}$ $x_2 (n) = \{1,2,3,4\}$ (8)
6. Compute the DFT of the sequence x(n) = {1,1,1,1,1,1,0,0} (8)
7. From the first principles obtain the signal flow graph for computing 8 – point DFT using radix-2 DIF-FFT algorithm. An 8 point sequence is given by x(n)={2,2,2,2,1,1,1,1} compute its 8 point DFT of x(n) by radix-2 DIF-FFT (16)
8. Compute 5 point circular convolution of $x_1(n) = \delta (n) +\delta (n-1)-\delta (n-2) - \delta (n-3)$ and $x_2(n) = \delta (n) – \delta (n-2)+ \delta (n-4)$ (8)
9. Explain any five properties of DFT. (10)
10. Derive DIF – FFT algorithm. Draw its basic butterfly structure and compute the DFT $x(n) = (-1)^n$ using radix 2 DIF – FFT algorithm. (16)
11. Perform circular convolution of the sequence using DFT and IDFT technique $x_1(n) = \{0,1,2,3\}$

x_2 (n) = {1,0,0,1} (8)

12. Compute the DFT of the sequence x (n) = 1/3 δ (n) – 1/3 δ (n-1) +1/3 δ (n -2) (6)
13. From the first principles obtain the signal flow graph for computing 8 – point DFT using radix-2 DIT - FFT algorithm. Using the above compute the DFT of sequence x(n) = 2 sin nπ / 4 for $0 \le n \le 7$ (16)
14. What is circular convolution? Explain the circular convolution property of DFT and compute the circular convolution of the sequence x(n)=(2,1,0,1,0) with itself (8)
15. Perform circular convolution of the sequence using DFT and IDFT technique x_1(n) = {0,1,2,3} x_2 (n) = {1,0,0,1} (8)
16. i) Compute the DFT of the sequence x (n) = $(-1)^n$ (4)
    ii) What are the differences and similarities between DIT – FFT and DIF– FFT algorithms? (4)
17. From the first principles obtain the signal flow graph for computing 8 – point DFT using radix-2 DIT - FFT algorithm. Using the above compute the DFT of sequence x(n) = cos nπ / 4 for $0 \le n \le 7$ (16)
18. Compute 4-point DFT of the sequence x(n) = {0,1,2,3} (6)
19. Compute 4-point DFT of the sequence x(n) = {1,0,0,1} (6)
20. Explain the procedure for finding IDFT using FFT algorithm (6)

UNIT II IIR FILTER DESIGN

Structures of IIR – Analog filter design – Discrete time IIR filter from analog filter – IIR filter design by Impulse Invariance, Bilinear transformation, Approximation of derivatives – (LPF, HPF, BPF, BRF) filter design using frequency translation.

PART-A

1. **Define IIR filter?**
   IIR filter has Infinite Impulse Response.
2. **What are the various methods to design IIR filters?**
   - Approximation of derivatives
   - Impulse invariance
   - Bilinear transformation.
3. **Which of the methods do you prefer for designing IIR filters? Why?**
   Bilinear transformation is best method to design IIR filter, since there is no aliasing in it.
4. **What is the main problem of bilinear transformation?**
   Frequency warping or nonlinear relationship is the main problem of bilinear transformation.
5. **What is prewarping?**
   Prewarping is the method of introducing nonlinearly in frequency relationship to compensate warping effect.
6. **State the frequency relationship in bilinear transformation?**
   $\Omega = \frac{2}{} \tan (w/2) T$

7. **Where the jΩ axis of s-plane is mapped in z-plane in bilinear transformation?**
   The jΩ axis of s-plane is mapped on the unit circle in z-plane in bilinear transformation
8. **Where left hand side and right hand side are mapped in z-plane in bilinear transformation?**
   Left hand side -- Inside unit circle
   Right hand side – Outside unit circle
9. **What is the frequency response of Butterworth filter?**
   Butterworth filter has monotonically reducing frequency response.
10. **Which filter approximation has ripples in its response?**
    Chebyshev approximation has ripples in its pass band or stop band.
11. **Can IIR filter be designed without analog filters?**
    Yes. IIR filter can be designed using pole-zero plot without analog filters
12. **What is the advantage of designing IIR Filters using pole-zero plots?**
    The frequency response can be located exactly with the help of poles and zeros.
13. **Compare the digital and analog filter.**

Digital filter	Analog filter
i) Operates on digital samples of the signal. ii) It is governed by linear difference equation. iii) It consists of adders, multipliers and delays implemented in digital logic. iv) In digital filters the filter coefficients are designed to satisfy the desired frequency response.	i) Operates on analog signals. ii) It is governed by linear difference equation. iii) It consists of electrical components like resistors, capacitors and inductors. iv) In digital filters the approximation problem is solved to satisfy the desired frequency response.

14. **What are the advantages and disadvantages of digital filters?**
    <u>Advantages of digital filters</u>
    - High thermal stability due to absence of resistors, inductors and capacitors.
    - Increasing the length of the registers can enhance the performance characteristics like accuracy, dynamic range, stability and tolerance.
    - The digital filters are programmable.
    - Multiplexing and adaptive filtering are possible.

    <u>Disadvantages of digital filters</u>
    - The bandwidth of the discrete signal is limited by the sampling frequency.
    - The performance of the digital filter depends on the hardware used to implement the filter.
15. **What is impulse invariant transformation?**
    The transformation of analog filter to digital filter without modifying the impulse response of the filter is called impulse invariant transformation.
16. **How analog poles are mapped to digital poles in impulse invariant transformation?**
    In impulse invariant transformation the mapping of analog to digital poles are as follows,
    - The analog poles on the left half of s-plane are mapped into the interior of unit circle in z-plane.

- The analog poles on the imaginary axis of s-plane are mapped into the unit circle in the z-plane.
- The analog poles on the right half of s-plane are mapped into the exterior of unit circle in z-plane.

17. What is the importance of poles in filter design?

The stability of a filter is related to the location of the poles. For a stable analog filter the poles should lie on the left half of s-plane. For a stable digital filter the poles should lie inside the unit circle in the z-plane.

18. Why an impulse invariant transformation is not considered to be one-to-one?

In impulse invariant transformation any strip of width $2\pi/T$ in the s-plane for values of s-plane in the range $(2k-1)/T \leq \Omega \leq (2k-1)\ \pi/T$ is mapped into the entire z-plane. The left half of each strip in s-plane is mapped into the interior of unit circle in z-plane, right half of each strip in s-plane is mapped into the exterior of unit circle in z-plane and the imaginary axis of each strip in s-plane is mapped on the unit circle in z-plane. Hence the impulse invariant transformation is many-to-one.

19. What is Bilinear transformation?

The bilinear transformation is conformal mapping that transforms the s-plane to z-plane. In this mapping the imaginary axis of s-plane is mapped into the unit circle in z-plane, The left half of s-plane is mapped into interior of unit circle in z-plane and the right half of s-plane is mapped into exterior of unit circle in z-plane. The Bilinear mapping is a one-to-one mapping and it is accomplished when

20. How the order of the filter affects the frequency response of Butterworth filter.

The magnitude response of butterworth filter is shown in figure, from which it can be observed that the magnitude response approaches the ideal response as the order of the filter is increased.

21. Write the properties of Chebyshev type –1 filters.

- The magnitude response is equiripple in the passband and monotonic in the stopband.
- The chebyshev type-1 filters are all pole designs.
- The magnitude response approaches the ideal response as the value of N increases.

22. Compare the Butterworth and Chebyshev Type-1 filters.

Butterworth	Chebyshev Type - 1
i. All pole design. ii. The poles lie on a circle in s-plane. iii. The magnitude response is maximally flat at the origin and monotonically decreasing function of Ω. iv. The normalized magnitude response has a value of 1 / root 2 at the cutoff frequency Ω_C. v. Only few parameters has to be calculated to determine the transfer function.	i. All pole design. ii. The poles lie on a ellipse in s-plane. iii. The magnitude response is equiripple in passband and monotonically decreasing in the stopband. iv. The normalized magnitude response has a value of 1 / root $(1+\varepsilon^2)$ at the cutoff frequency Ω_C. v. A large number of parameters has to be calculated to determine the transfer function.

23. What are the different types of filters based on impulse response?

Based on impulse response the filters are of two types 1. IIR filter 2. FIR filter

The IIR filters are of recursive type, whereby the present output sample depends on the present input, past input samples and output samples.

The FIR filters are of non recursive type, whereby the present output sample depends on the present input, and previous output samples.

24. What are the different types of filter based on frequency response?

The filters can be classified based on frequency response.

They are I) Low pass filter ii) High pass filter iii) Band pass filter iv) Band reject filter.

PART-B

1. Describe the impulse invariance and bilinear transformation methods used for designing digital IIR filters. (16)
2. Obtain the cascade and parallel realization of the system described by
   y(n) = -0.1y(n-1)+0.2y(n-2)+3x(n)+3.6x(n-1)+0.6x(n-2) (10)
3. Determine the direct form II and parallel form realization for the following system.
   y(n) = -0.1y(n-1)+0.72y(n-2)+0.7x(n)-0.252x(n-2) (16)
4. An analog filter has a transfer function H(s) = (10 / s2+7s+10). Design a digital filter equivalent to this impulse invariant method. (16)
5. For the given specifications design an analog Butterworth filter,
   $0.9 \le H(j\Omega) \le 1$ for $0 \le \Omega \le 0.2\pi$
   $H(j\Omega) \le 0.2$ for $0.4\pi \le \Omega\ \pi$ (16)
6. Design a digital Butterworth filter satisfying the constraints
   $0.707 \le H(ejw) \le 1$ for $0 \le \omega \le \pi/2$
   $H(ejw) \le 0.2$ for $3\pi \le \omega \le \pi$

With T = 1 sec using Bilinear transformation. (16)

7. Design a Chebyshev filter for the following specification using impulse invariance method.
   $0.8 \le H(ejw) \le 1$ for $0 \le \omega \le 0.2\pi$
   $H(ejw) \le 0.2$ for $0.6\pi \le \omega \le \pi$ (16)

8. Design a digital Chebyshev filter to meet the constraints

$$\frac{1}{\sqrt{2}} \le H(e^{jw}) \le 1\, for\, 0 \le w \le 0.2\pi$$
$$0 \le \left|H(e^{jw})\right| \le 0.1\, for\, 0.5\pi \le w \le \pi$$

by using bilinear transformation and assume sampling period T=1sec. (16)

9. Design an analog Butterworth filter that has a 2db passband attenuation at a frequency of 20 rad/sec and atleast 10d stopband attenuation at 30rad/sec. (16)

10. Obtain the direct form I, direct form II, cascade and parallel form realization for the system $y(n) = -0.1\,y(n-1) + 0.2\,y(n-2) + 3x(n) + 3.6x(n-1) + 0.6\,x(n-2)$ – (16 marks)

UNIT III FIR FILTER DESIGN

Structures of FIR – Linear phase FIR filter – Fourier series - Filter design using windowing techniques (Rectangular Window, Hamming Window, Hanning Window), Frequency sampling techniques – Finite word length effects in digital Filters: Errors, Limit Cycle, Noise Power Spectrum.

1. **Distinguish between FIR and IIR filters.**

S.No.	FIR filter	IIR filter
1.	These filters can be easily designed to have perfectly linear phase.	These filters do not have linear phase. IIR filters can be realized recursively.
2.	FIR filters can be realized recursively and non-recursively. Greater flexibility to control the shape of their magnitude response.	Less flexibility,usually limited to kind of filters.
3.	Errors due to roundoff noise are less severe in FIR filters, mainly because feedback is not used.	The roundoff noise in IIR filters are more.
4.		

2. **What are the techniques of designing FIR filters?**
   There are three well-known methods for designing FIR filters with linear phase. These are 1) windows method 2) Frequency sampling method 3) Optimal or minimax design.
3. **What is the reason that FIR filter is always stable?**
   FIR filter is always stable because all its poles are at origin
4. **What are the properties of FIR filter?**
   1. FIR filter is always stable.
   2. A realizable filter can always be obtained.
   3. FIR filter has a linear phase response.
5. **What are the advantages of FIR filters?**
   - Linear phase FIR filter can be easily designed.
   - Efficient realization of FIR filter exist as both recursive and nonrecursive structures.
   - FIR filters realized nonrecursively are always stable.
   - The round off noise can be made small in nonrecursive realization of FIR filters.
6. **What are the disadvantages of FIR filters?**
   - The duration of impulse response should be large to realize sharp cutoff filters.
   - The non-integral delay can lead to problems in some signal processing applications.
7. **What is the necessary and sufficient condition for the linear phase characteristic of an FIR** filter**?**
   The necessary and sufficient condition for the linear phase characteristic of an FIR filter is that the phase function should be a linear function of w, which in turn requires constant phase and group delay.
8. **What are the conditions to be satisfied for constant phase delay in linear phase FIR filters?**
   The conditions for constant phase delay are

Phase delay, $\alpha = (N-1)/2$ (i.e., phase delay is constant)

Impulse response, $h(n) = -h(N-1-n)$ (i.e., impulse response is antisymmetric)

9. What are the possible types of impulse response for linear phase FIR filters?

There are four types of impulse response for linear phase FIR filters

- Symmetric impulse response when N is odd.
- Symmetric impulse response when N is even.
- Antisymmetric impulse response when N is odd.
- Antisymmetric impulse response when N is even.

10. List the well-known design techniques of linear phase FIR filters.

There are three well-known design techniques of linear phase FIR filters. They are

- Fourier series method and window method
- Frequency sampling method.
- Optimal filter design methods.

11. What is Gibb's phenomenon (or Gibb's Oscillation)?

In FIR filter design by Fourier series method the infinite duration impulse response is truncated to finite duration impulse response. The abrupt truncation of impulse response introduces oscillations in the pass band and stop band. This effect is known as Gibb's phenomenon (or Gibb's Oscillation).

12. When cascade form realization is preferred in FIR filters?

The cascade form realization is preferred when complex zeros with absolute magnitude less than one.

13. What are the desirable characteristics of the frequency response of window function?

The desirable characteristics of the frequency response of window function are

- The width of the main lobe should be small and it should contain as much of the total energy as possible.
- The side lobes should decrease in energy rapidly as w tends to π.

14. What are the drawback in FIR filter design using windows and frequency sampling method? How it is overcome?

The FIR filter design using windows and frequency sampling method does not have Precise control over the critical frequencies such as w_p and w_s. This drawback can be overcome by designing FIR filter using Chebyshev approximation technique. In this technique an error function is used to approximate the ideal frequency response, in order to satisfy the desired specifications.

15. Write the characteristic features of rectangular window.

The main lobe width is equal to $4\pi/N$.

The maximum side lobe magnitude is –13dB.

The side lobes magnitude does not decrease significantly with increasing w.

16. List the features of FIR filter designed using rectangular window.

The width of the transition region is related to the width of the main lobe of window spectrum.

Gibb's oscillations are noticed in the pass band and stop band.
The attenuation in the stop band is constant and cannot be varied.

17. Why Gibb's oscillations are developed in rectangular window and how it can be eliminated or reduced?

The Gibb's oscillations in rectangular window are due to the sharp transitions from 1 to 0 at the edges of window sequence.

These oscillations can be eliminated or reduced by replacing the sharp transition by gradual transition. This is the motivation for development of triangular and cosine windows.

18. List the characteristics of FIR filters designed using windows.

The width of the transition band depends on the type of window.
The width of the transition band can be made narrow by increasing the value of N
Where N is the length of the window sequence.
The attenuation in the stop band is fixed for a given window, except in case of Kaiser Window where it is variable.

19. Compare the rectangular window and hamming window.

Rectangular window	**Hamming Window**
i) The width of main lobe in window spectrum is $4\pi/N$ **ii) The maximum side lobe magnitude in window spectrum is – 13dB.** **iii) In window spectrum the side lobe magnitude slightly decreases with increasing w.** **iv) In FIR filter designed using rectangular window the minimum stop band attenuation is 22dB.**	i) The width of main lobe in window spectrum is $8\pi/N$ **ii) The maximum side lobe magnitude in window spectrum is – 31dB.** **iii) In window spectrum the side lobe magnitude decreases with increasing w.** **iv) In FIR filter designed using hamming window the minimum stop band attenuation is 44dB.**

20. What are the types of digital filter according to theie impulse response?

- IIR filter
- FIR filter

PART-B

1. (a) Write the expressions for the Hamming, Hanning, Blackman and rectangular windows. (6)
(b) Explain the design of FIR filters using windows. (10) 2.
Design an ideal high pass filter with
$Hd(e^{jw}) = 1$ for $\pi/4 \le \omega \le \pi$
$= 0$ for $\omega \le \pi/4$
Using Hanning window for N=11. (16)

3. Using a rectangular window technique design a low pass filter with pass band gain of unity, cutoff frequency of 1000 Hz and working at a sampling frequency of 5 kHz. The length of the impulse response should be 7. (16)

4. Design an ideal Hilbert transformer having frequency response

$$H(e^{jw}) = j \text{ for } -\pi \le \omega \le 0$$
$$= -j \text{ for } 0 \le \omega \le \pi$$

Using Blackman window for N=11.Plot the frequency response. (16)

5. (a) i) Derive the frequency response of a linear phase FIR filter when impulse responses Antisymmetric & order N is odd

ii) Explain design of FIR filter by frequency sampling technique (16)

6. Design an Ideal Hilbert transformer using Hanning window and Blackman window for N=11. Plot the frequency response in both cases (16)

7. Prove that FIR filter has linear phase if the unit impulse response satisfies the condition h(n)=h(N-1-n), n=0,1,……M-1. Also discuss symmetric and antisymmetric cases of FIR filter (16)

8. Explain the need for the use of window sequences in the design of FIR filter. Describe the window sequences generally used and compare their properties (16)

9. Use window method with a Hamming window to design a 13-tap differentiator (N=13). (16)

10. An FIR filter is given by the difference equation y(n)=2x(n)+4/5 x(n-1)+3/2 x(n-2)+2/3 x(n-3) Determine its Realization structure. (16)

11. Realize the system function H (z) $= \frac{1}{2} + \frac{1}{3}z^{-1} + z^{-2} + \frac{1}{4}z^{-3} + z^{-4} + \frac{1}{3}z^{-5} + \frac{1}{2}z^{-6}$ by linear phase FIR structure.

12. Discuss about any three window functions used in the design of FIR filters. (16)

UNIT IV FINITE WORDLENGTH EFFECTS

Fixed point and floating point number representations – ADC –Quantization- Truncation and Rounding errors - Quantization noise – coefficient quantization error – Product quantization error - Overflow error – Round off noise power - limit cycle oscillations due to product round off and overflow errors – Principle of scaling

PART-A

1. **What do finite word length effects mean?**
   The effects due to finite precision representation of numbers in a digital system are called finite word length effects.
2. **List some of the finite word length effects in digital filters.**
   1. Errors due to quantization of input data.
   2. Errors due to quantization of filter co-efficient

3. Errors due to rounding the product in multiplications
4. Limit cycles due to product quantization and overflow in addition.

3. What are the different formats of fixed-point representation?

a. Sign magnitude format
b. One' Complement format
c. Two's Complement format.

In all the three formats, the positive number is same but they differ only in representing negative numbers.

4. Explain the floating-point representation of binary number.

The floating-point number will have a mantissa part. In a given word size the bits allotted for mantissa and exponent are fixed. The mantissa is used to represent a binary fraction number and the exponent is a positive or negative binary integer. The value of the exponent can be adjusted to move the position of binary point in mantissa. Hence this representation is called floating point.

5. What are the types of arithmetic used in digital computers?

The floating point arithmetic and two's complement arithmetic are the two types of arithmetic employed in digital systems.

6. What are the two types of quantization employed in digital system?

The two types of quantization in digital system are Truncation and Rounding.

7. What is truncation?

The truncation is the process of reducing the size of binary number by discarding all bits less significant than the least significant bit that is retained.

8. What is rounding?

Rounding is the process of reducing the size of a binary number to finite word size of b-bits such that, the rounded b-bit number is closest to the original unquantized number.

9. Explain the process of upward rounding?

In upward rounding of a number of b-bits, first the number is truncated to b-bits by retaining the most significant b-bits. If the bit next to the least significant bit that is retained is zero, then zero is added to the least significant bit of the truncated number. If the bit next to the least significant bit that is retained is one then one is added to the least significant bit of the truncated number.

10. What are the errors generated by A/D process ?

The A/D process generates two types of errors. They are quantization error and saturation error. The quantization error is due to representation of the sampled signal by a fixed number of digital levels. The saturation errors occur when the analog signal exceeds the dynamic range of A/D converter.

11. What is quantization step size?

In digital systems, the numbers are represented in binary. With b-bit binary we can generate 2^b different binary codes. Any range of analog value to be represented in binary should be divided into 2b levels with equal increment. The 2^b levels are called quantization levels and the increment in each level is called quantization step size. If R is the range of analog signal then, Quantization step size, $q = R/2^b$

12. Why errors are created in A/D process?

In A/D process the analog signals are sampled and converted to binary. The sampled analog signal will have infinite precision. In binary representation of b- bits we have different values with finite precision. The binary values are called quantization levels. Hence the samples of analog are quantized in order to fit into any one of the quantized levels. This quantization process introduces errors in the signal.

13. What is steady state output noise power due to input quantization?

The input signal to digital system can be considered as a sum of unquantized signal and error signal due to input quantization. The response of the system can be expressed as a summation of response

due to unquantized input and error signal.

The response of the system due to error signal is given by convolution of error signal and impulse response. The variance of response of the system for error signal is called state output noise power.

14. What is meant by coefficient inaccuracy?

In digital computation the filter coefficients are represented in binary. With b-bit binary we can generate only 2b different binary numbers and they are called quantization levels. Any filter coefficient has to be fitted into any one of the quantizat6ion levels. Hence the filter coefficients are quantized to represent in binary and the quantizatiion introduces errors in filter coefficients. Therefore the coefficients cannot be accurately represented in a digital system and this problem is referred to as coefficient inaccuracy.

15. How the digital filter is affected by quantization of filter coefficients?

The quantization of the filter coefficients will modify the value of poles & zeros and so the location of poles and zeros will be shifted from the desired location. This will create deviations in the frequency response of the system. Hence the resultant filter will have a frequency response different from that of the filter with unquantized coefficients.

16. How the sensitivity of frequency response to quantization of filter coefficients is minimized?

The sensitivity of the filter frequency response to quantization of the filter coefficients is minimized by realizing the filter having a large number of poles and zeros as an interconnection of second order sections. Hence the filter can be realized in cascade or parallel form, in which the basic buildings blocks are first order and second order sections

17. What is meant by product quantization error?

In digital computations, the output of multipliers i.e., the product are quantized to finite word length in order to store them in registers and to be used in subsequent calculations. The error due to the quantization of the output of multiplier is referred to as product quantization error.

18. Why rounding is preferred for quantizing the product?

In digital system rounding due to the following desirable characteristic of rounding performs the product quantization

1. The rounding error is independent of the type of arithmetic
2. The mean value of rounding error signal is zero.
3. The variance of the rounding error signal is least.

19. Define noise transfer function (NTF)?

The Noise Transfer Function is defined as the transfer function from the noise source to the filter output. The NTF depends on the structure of the digital networks.

20. What are the assumptions made regarding the statistical independence of the various noise sources in the digital filter?

The assumptions made regarding the statistical independence of the noise sources are,

1. Any two different samples from the same noise source are uncorrelated.
2. Any two different noise source, when considered, as random processes are uncorrelated.
3. Each noise source is uncorrelated with the input sequence.

21. What are limit cycles?

In recursive systems when the input is zero or some nonzero constant value, the nonlinearities die to finite precision arithmetic operations may cause periodic oscillations in the output. These oscillations are called limit cycles.

22. What are the two types of limit cycles?

The two types of limit cycles are zero input limit cycles and overflow limit cycles.

23. What is zero input limit cycles?

In recursive system, the product quantization may create periodic oscillations in the output. These oscillations are called limit cycles. If the system output enters a limit cycles, it will continue to remain in limit cycles even when the input is made zero. Hence these limit cycles are also called zero input limit cycles.

24. What is dead band?

In a limit cycle the amplitudes of the output are confined to a range of values, which is called dead band of the filter.

25. How the system output cam be brought out of limit cycles?

The system output can be brought out of limit cycle by applying an input of large magnitude, which is sufficient to drive the system out of limit cycle.

26. What is saturation arithmetic?

In saturation arithmetic when the result of an arithmetic operation exceeds the dynamic range of number system, then the result is set to maximum or minimum possible value. If the upper limit is exceeded then the result is set to maximum possible value. If the lower limit is exceeded then the r4esult is set to minimum possible value.

27. What is overflow limit cycle?

In fixed point addition the overflow occurs when the sum exceeds the finite word length of the register used to store the sum. The overflow in addition may lead to oscillations in the output which is called overflow limit cycles.

28. How overflow limit cycles can be eliminated?

The overflow limit cycles can be eliminated either by using saturation arithmetic or by scaling the input signal to the adder.

29. What is the drawback in saturation arithmetic?

The saturation arithmetic introduces nonlinearity in the adder which creates signal distortion

PART – B

1. Draw the quantization noise model for a second order system and explain
   H (z) =1/ (1-2rcos□z-1+r2z-2) and find its steady state output noise variance.
2. Consider the transfer function H (z) =H_1 (z) H_2 (z) where
   H_1 (z) =1/ (1-a_1z^{-1}), H_2 (z) =1/ (1-a_2z^{-2}). Assume a1=0.5 and a2=0.6 and find out the output round off noise power.
3. Find the effect of coefficient quantization on pole locations of the given second order IIR system when it is realized in direct form-1 and in cascade form. Assume a word length of 4-bits through truncation.H (z) = 1/ (1-0.9z-1+0.2z –2)

4. Explain the characteristics of Limit cycle oscillations with respect to the system described by the differential equations. y (n)= 0.95y(n-1)+x(n) and determine the dead band of the filter

5. Two first order low pass filter whose system functions are given below are connected in cascade. Determine the overall output noise power
   H_1 (Z) =1/ (1-0.9Z-1) H_2 (Z) =1/ (1-0.8Z-1)
6. Consider a Butterworth low pass filter whose transfer function is
   H (z) =0.05$(1+z-1)^2$ / (1-1.2z^{-1} +0.8 $z^{-2)}$. Compute the pole positions in z-plane and calculate the scale factor S_o to prevent overflow in adder 1.

7. Express the decimal values 0.78125 and -0.1875 in
   One's complement form
   Sign magnitude form
   Twos complement form.
8. Express the decimal values -6/8 and 9/8 in (i) Sign magnitude form (ii) One's complement form (iii) Twos complement form
9. Study the limit cycle behavior of the following systems
   i. y(n) = 0.7y(n-1) + x (n)
   ii. y (n) = 0.65y(n-2) + 0.52y (n-1) + x (n)
10. For the system with system function H (z) =1+0.75z^{-1} / 1-0.4z^{-1} draw the signal flow graph and find scale factor s_0 to prevent overflow limit cycle oscillations

11. Derive the quantization input nose power and determine the signal to noise ratio of the system (Refer Ramesh babu text book)

12. Explain product quantization error and coefficient quantization error with examples

13. Derive the scaling factor S_o that prevents the overflow limit cycle oscillations in a second order IIR system.

14. Find the steady state variance of the noise in the output due to quantization of input for the first order filter y(n)=ay(n-1)+x(n)

UNIT V DSP APPLICATIONS

Multirate signal processing: Decimation, Interpolation, Sampling rate conversion by a rational factor – Adaptive Filters: Introduction, Applications of adaptive filtering to equalization.

1. **Define decimation**

   Decimation is the process of reducing the sampling rate of a signal. Complementary to interpolation, which increases sampling rate, it is a specific case of sample rate conversion in a multi-rate digital signal processing system. Decimation utilises filtering to mitigate aliasing distortion, which can occur when simply **downsampling** a signal. A system component that performs decimation is called a **decimator**.

2. **What is multirate signal processing?**

   The theory of processing signals at different sampling rates is called multirate signal processing

3. **Define down sampling**

   Down sampling a sequence x(n) by a factor M is the process of picking every Mth sample and discarding the rest.

4. **What is meant by up sampling?**

   Up sampling by factor L is the process of inserting L-1 zeros between two consecutive samples 4. I the spectrum of a sequence x(n) is X(exp(jw)), then what is the spectrum of a signal down sampled by factor 2

5.What is adaptive filter in DSP?

An adaptive filter is a system with a linear filter that has a transfer function controlled by variable parameters and a means to adjust those parameters according to an optimization algorithm. Because of the complexity of the optimization algorithms, most adaptive filters are digital filters.

6.Where the Adaptive Filters are required in DSP?

Adaptive filters are required in desired processing operation (for instance, the locations of reflective surfaces in a reverberant space) are not known in advance or are changing. The closed loop adaptive filter uses feedback in the form of an error signal to refine its transfer function and also used in used in devices such as mobile phones and other communication devices, camcorders and digital cameras, and medical monitoring equipment.

7.Draw Adaptive Filter

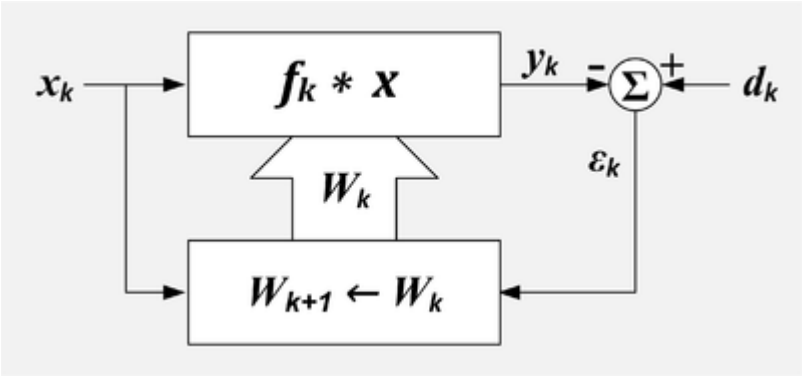

8. What are the applications of Adaptive filter?

- Noise cancellation
- Signal prediction
- Adaptive feedback cancellation
- Echo cancellation

9. What is meant by sampling rate conversion?

Sample-rate conversion is the process of changing the sampling rate of a discrete signal to obtain a new discrete representation of the underlying continuous signal.[1] Application areas include image scaling, and audio/visual systems, where different sampling-rates may be used for engineering, economic, or historical reasons.

10. Draw the block diagram of decimation by a factor of D.

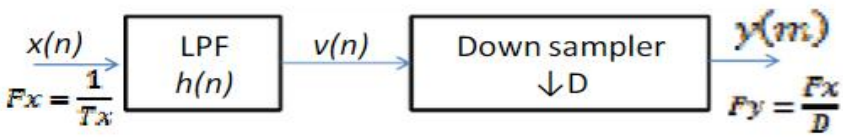

$$\text{where } H_D(\omega) = \begin{cases} 1, & |\omega| \le \pi/D \\ 0, & \text{otherwise} \end{cases}$$

11. Define interpolation

The process of increasing the sampling rate of DSP by an integer is called as interpolation

12. Draw the block diagram of sampling rate converstion by factor 1/D

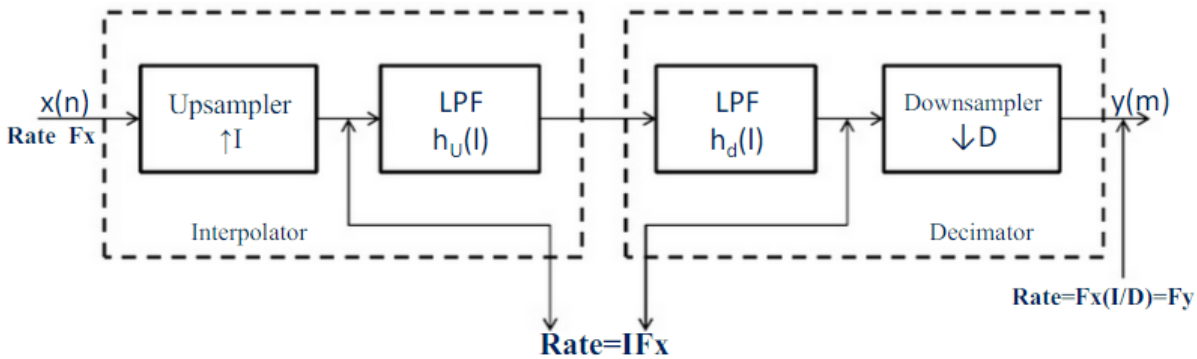

13.Draw poly phase filter structure for sampling rate conversion

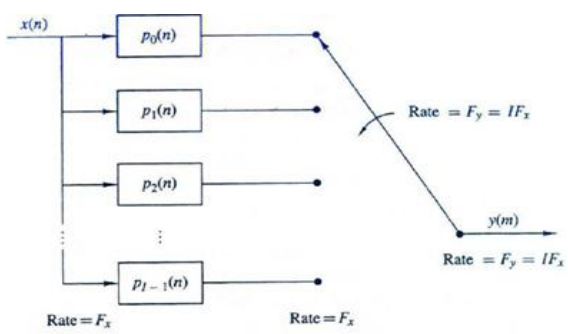

14.Draw the block diagram of time sampling rate converstion using time domain perspective

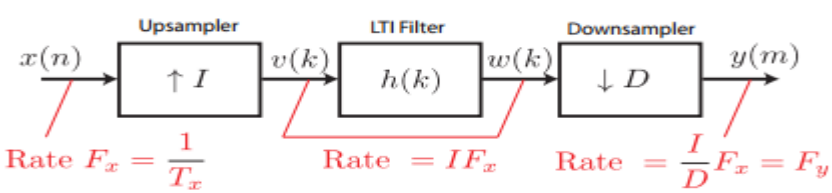

15.Draw sampling rate conversion by 1/D system

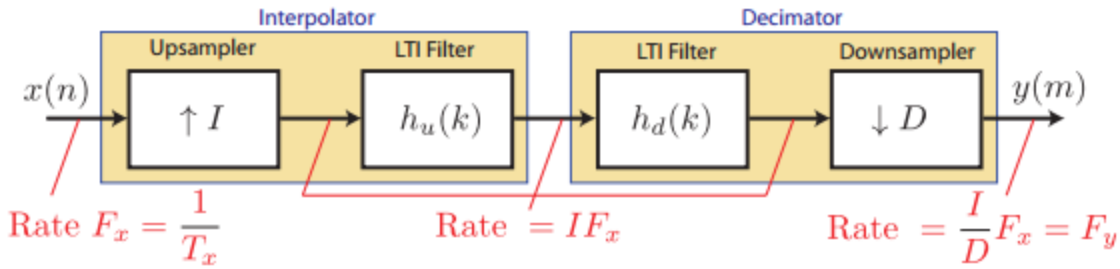

16.What are the methods of implementation of digital filter banks?

1. Analysis filter bank
2. Synthesis filter bank

17. Draw the block diagram of phase shifters using Adaptive filtering

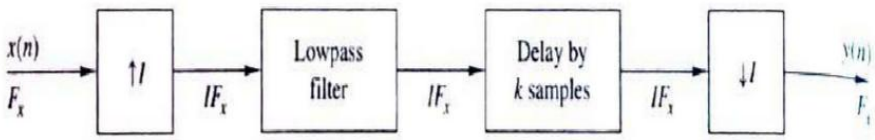

18.Draw the block diagram of sub band coding of speech signal

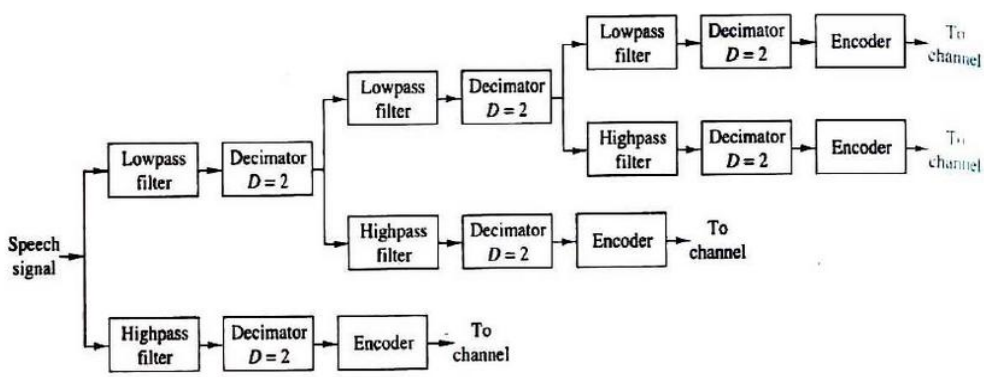

19.Draw the block diagram of QMF bank

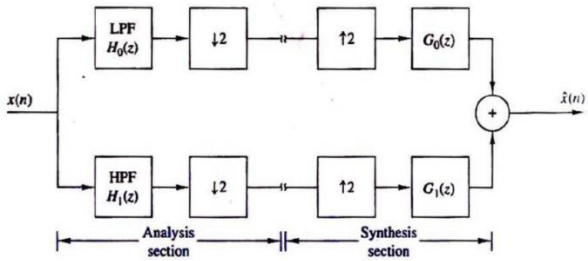

20. Draw Block diagram of the general adaptive inverse system identification

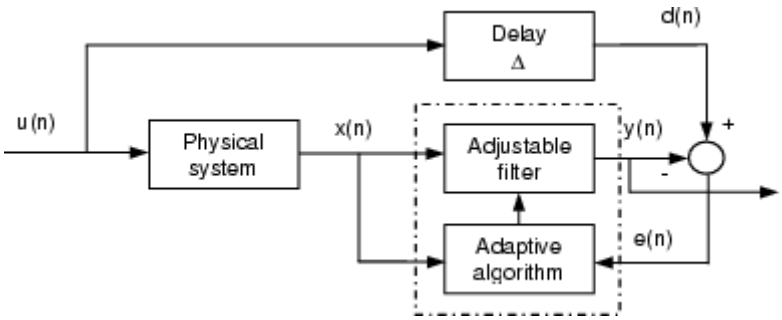

PART-B

1) Explain the concept of decimation by a factor D and interpolation by factor I
2) With help of equation explain sampling rate conversion by a rational factor I/D
3) With help diagram explain adaptive filtering process.
4) Write short notes on up sampling and down sampling.
5) State the applications of multirate signal processing.
6) Explain the multistage implementation of sampling rate conversion
7) Explain in detail about decimation and interpolation.
8) Explain the polyphase structure of decimator and interpolator.
9) Discuss the procedure to implement digital filter bank using Multirate signal processing
10) Write short notes on adaptive filter equalization and explain its any one of the applications.

Question Paper Code : 27200

B.E./B.Tech. DEGREE EXAMINATION, NOVEMBER/DECEMBER 2015.

Fifth Semester

Medical Electronics

EC 6502 — PRINCIPLES OF DIGITAL SIGNAL PROCESSING

(Common to Electronics and Communication Engineering)

(Regulations 2013)

Time : Three hours Maximum : 100 marks

Answer ALL questions.

PART A — (10 × 2 = 20 marks)

1. Define DT system.

2. How do you obtain a digital signal for DT signal?

3. Define pass band.

4. Use the backward difference for the derivative to convert analog LPF with system function $H(S)=\frac{1}{S+2}$.

5. List the disadvantages of FIR filters.

6. List the desirable window characteristics.

7. What does the truncation of data result in?

8. List the representations for which truncation error is analyzed.

9. List the areas in which multirate processing is used.

10. State sampling theorem for a band limited signal.

PART B — (5 × 16 = 80 marks)

11. (a) (i) Illustrate the construction of an 8 – point DFT from two 4 – point DFTs. (8)

(ii) Illustrate the reduction of an 8 – point DFT to two 4 – point DFTs by decimation in frequency. (8)

Or

(b) (i) Check whether the following systems are linear :

(1) $y_{(n)} = \frac{1}{N}\sum_{M=0}^{N-1} x(n-m)$. (4)

(2) $y_{(n)} = [x(n)]^2$. (4)

(ii) Find the impulse response of the causal system $y(n) - y(n-1) = x(n) + x(n-1)$. (8)

12. (a) (i) An analog filter has the following system function. Convert this filter into a digital filter using backward difference for the derivative $H(s) = \frac{1}{(S+0.1)^2+9}$. (8)

(ii) Convert the analog filter into a digital filter whose system function is $H(s) = \frac{s+0.2}{(s+0.2)^2+9}$. Use impulse invariance technique. Assume $T = 1$ sec. (8)

Or

(b) (i) Convert the analog filter with system function $H(s) = \frac{s+0.1}{(s+0.1)^2+9}$ into a digital IIR filter using bilinear transformation. The digital filter should have a resonant frequency of $w_r = \frac{\pi}{4}$. (8)

(ii) A digital filter with a 3 dB bandwidth of 0.25 π is to be designed from the analog filter whose system response is $H(s) = \frac{\Omega_c}{s+\Omega_c}$. Use bilinear transformation and obtain $H(Z)$. (8)

13. (a) (i) List the steps involved by the general process of designing a digital filter. (8)

(ii) List the advantages of FIR filters. (8)

(b) (i) The transfer function $H(z)=\sum_{N=0}^{M-1} h(n)z^{-n}$ characterizes a FIR filter $(M=11)$. Find the magnitude response. (8)

(ii) Use Fourier series method to design a low pass digital filter to approximate the ideal specifications given by

$$H(e^{jw})=\begin{cases}1, & |f|\le f_p \\ 0, & f_p<|f|\le F/2\end{cases}$$

Where f_p = pass band frequency

F = sampling frequency (8)

14. (a) (i) The output of an ADC is applied to a digital filter with system function $H(z)=\frac{0.5z}{z-0.5}$. Find the output noise power from digital filter when input signal is quantized to have 8 bits. (8)

(ii) Prove that $\sum_{n=0}^{\infty} x^2(n)=\frac{1}{2\pi j}\oint_c x(z)x(z^{-1})z^{-1}dz$. (8)

Or

(b) A digital system is characterized by the difference equation $y(n)=0.9y(n-1)+x(n)$ with $x(0)=0$ and initial condition $y(-1)=12$. Find the dead band of the system. Verify with formula for largest integer. (16)

15. (a) (i) Obtain the decimated signal $y(n)$ by a factor 3 from the input signal $x(n)$. (8)

(ii) Implement a 2 – stage decimator for the following specifications :

Sampling rate of the input signal = 20 kHz, M= 100

Pass band = 0 to 40 Hz

Transition band = 40 to 50 Hz

Pass band ripple = 0.01

Stop band ripple = 0.002. (8)

Or

(b) (i) Draw the signal flow graph for IIR structure M–to–1 decimator. (8)

(ii) Draw the signal flow graph for 1 – to –L interpolator. (8)

Question Paper Code : 57293

B.E./B.Tech. DEGREE EXAMINATION, MAY/JUNE 2016

Fifth Semester

Medical Engineering

EC 6502 – PRINCIPLES OF DIGITAL SIGNAL PROCESSING

(Common to Electronics and Communication Engineering)

(Regulations 2013)

Time : Three Hours **Maximum : 100 Marks**

Answer ALL questions.

PART – A (10 × 2 = 20 Marks)

1. Is $h(n) = \frac{-1}{4}\delta(n+1) + \frac{1}{2}\delta(n) - \frac{1}{4}\delta(n-1)$ is stable and causal ? Justify.

2. What is the smallest no. of DFTs and IDFTs needed to compute the linear convolution of a length 50 sequence with a length of 800 sequence is to be computed using 64 pt DFT & IDFT ?

3. What is known as warping effect ?

4. Why impulse invariant method is not preferred in the design of IIR filter other than LPF ?

5. What are the two kinds of limit cycle behaviour in DSP ?

6. List out the advantages of FIR filters.

7. Define Dead band.

8. What are the methods used to prevent overflow ?

9. What is the need for antialiasing filter ?

10. If the spectrum of a sequence $x(n)$ is $X(e^{jw})$, then what is the spectrum of the signal down sampled by 2 ?

PART – B (5 × 16 = 80 Marks)

11. (a) (i) State and prove if $x_3(K) = x_1(K)\ x_2(K)$, then $x_3(n) = \sum_{m=0}^{N-1} x_1(m)\ x_2((n-m))_N$. **(6)**

(ii) Using the equation given in 11(a)(i), for the 8 point DFT of the sequence

$x(n) = 1, 0 \le n \le 3$

$0, 4 \le n \le 7$, compute the

DFT of $x_1(n) = 1, n = 0$

$0, 1 \le n \le 4$

$1, 5 \le n \le 7$. **(10)**

OR

(b) (i) Compute the 8 point circular convolution

$x_1(n) = \{1, 1, 1, 1, 0, 0, 0, 0\}$

$x_2(n) = \sin \frac{3\pi n}{8}, 0 \le n \le 7$

using matrix method. **(12)**

(ii) State the differences between (a) overlap-save (b) overlap-add. **(4)**

12. (a) If $H_a(S) = \frac{1}{(S+1)(S+2)}$, find the corresponding H(z) using impulse invariant method for sampling frequency of 5 samples/second. **(16)**

OR

(b) Write down steps to design digital filter using bilinear transform technique and using this design a HPF with a pass band cutoff frequency of 1000 Hz & down 10 dB at 350 Hz the sampling frequency is 5000 Hz. **(16)**

13. (a) Design a filter with $H_d(e^{jw}) = e^{-j3w}, -\frac{\pi}{4} \le w \le \frac{\pi}{4}$

$$= 0, \frac{\pi}{4} < |w| \le \pi$$

Using a Hamming window with N = 7. **(16)**

OR

(b) Consider the transfer function $H(z) = H_1(z) \cdot H_2(z)$ where $H_1(z) = \frac{1}{1 - \alpha_1 z^{-1}}$ and $H_2(z) = \frac{1}{1 - \alpha_2 z^{-1}}$. Find the output round off noise power by assuming $\alpha_1 = 0.5$, $\alpha_2 = 0.6$. **(16)**

14. (a) Draw the quantization noise model for a second order system $H(z) = \frac{1}{1 - 2r\cos\theta\, z^{-1} + r^2 z^{-2}}$ and find the steady state output noise variance. **(16)**

OR

(b) Explain the characteristics of limit cycle oscillation with respect to the system described by the difference equation $y(n) = 0.95\, y(n-1) + x(n)$. Determine the dead band of the filter. **(16)**

15. (a) For the signal $x(n)$, obtain the spectrum of down sampled signal $x(Mn)$ and upsampled signal $x\left(\frac{n}{L}\right)$ **(16)**

OR

(b) Discuss in detail about any two applications of adaptive filtering with a suitable diagram.

Reg. No. : [ ]

Question Paper Code : 80343

B.E./B.Tech. DEGREE EXAMINATION, NOVEMBER/DECEMBER 2016.

Fifth Semester

Medical Electronics

EC 6502 — PRINCIPLES OF DIGITAL SIGNAL PROCESSING

(Common to Electronics and Communication Engineering and Sixth Biomedical Engineering)

(Regulations 2013)

Time : Three hours Maximum : 100 marks

Answer ALL questions.

PART A — (10 × 2 = 20 marks)

1. Compare Radix 2 DIT, DIF FFT algorithm.

2. Test the causality and stability of $y(n) = \sin x(n)$.

3. What is known as prewarping?

4. What are the properties of bilinear transformation?

5. What do you understand by linear phase response?

6. What are the desirable characteristics of the window?

7. What are the different types of fixed point representation?

8. Name the three quantization error due to finite word length registers in digital filters.

9. What is the need for anti imaging filter after upsampling signal?

10. What is meant by adaptive filter?

\

PART B — (5 × 16 = 80 marks)

11. (a) Derive radix 2 – DIT FFT algorithm and obtain DFT of the sequence $x(n) = \{1,2,3,4,4,3,2,1\}$ using DIT algorithm. (16)

Or

(b) (i) Compute IDFT of the sequence $X(K) = \{7, -0.707, -j0.707, -j, 0.707 - j0.707, 1, 0.707 + j0.707\ j, -0.707 + j\,0.707\}$ using DIF algorithm. (10)

(ii) Perform the linear convolution of finite duration sequences $h(n) = \{1,2\}$ and $x(n) = \{1,2,-1,2,3,-2,-3,-1,1,2,-1\}$ by overlap save method. (6)

12. (a) Design a third order Butterworth digital filter using impulse invariant technique. Assume sampling period T = 1 sec. (16)

Or

(b) Convert the single pole low pass filter with system function $H(z) = \frac{0.5(1+z^{-1})}{1-0.302z^{-2}}$ into band pass filter with upper and lower cut off frequencies w_u & w_L respectively. The LPF has 3dB BW of $w_p = \frac{\pi}{6}$ & $w_u = \frac{3\pi}{4}$, $w_l = \frac{\pi}{4}$.

13. (a) Design an ideal BPF with a frequency response $Ha(e^{jw}) = 1, \quad for\ \frac{\pi}{4} \le |w| \le \frac{3\pi}{4}$.
$\qquad\qquad\qquad\quad 0, \quad \text{otherwise}$

Find the value of $h(n)$ for $N = 11$ and plot the frequency response. (16)

Or

(b) Design a linear phase FIR filter with a cut off frequency of $\frac{\pi}{2}$ r/sec. Take $N = 17$ using frequency sampling techniques. (16)

14. (a) Study the limit cycle behaviour of the system described by $y(n) = Q[a\,y(n-1)] + x(n)$, where $y(n)$ is the output of the filter and $Q[.]$ is quantization. Assume $a = \frac{7}{8}$, $x(0) = \frac{3}{4}$ & $x = 0$, for $n > 0$ choose 4 bit sign magnitude. (16)

Or

(b) For the digital network shown in figure find $H(z)$ and scale factor. So to avoid over flow register A_1 (16)

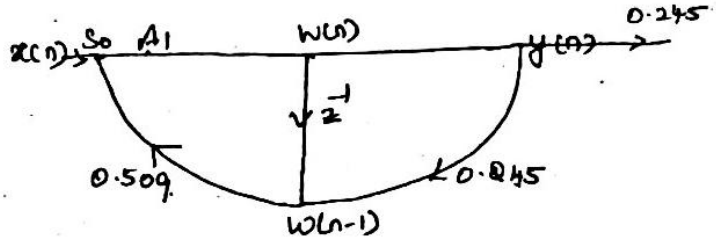

15. (a) (i) Explain in about detail the multistage implementation of sampling rate conversion. (8)

(ii) For the multirate system shown in figure develop an expression for the output $y(n)$ as a function of i/p $x(n)$ (8)

Or

(b) (i) Show that the upsampler and down sampler are time variant systems. (8)

(ii) The frequency response of $x(n)$ is shown in figure

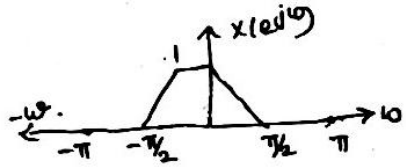

If the input is passed through a down sampler by 2, find the frequency response of output and give your comment on aliasing. (8)

EC6503 TRANSMISSION LINES AND WAVE GUIDES L T P C 3 1 0 4

UNIT I TRANSMISSION LINE THEORY 9

General theory of Transmission lines - the transmission line - general solution - The infinite line - Wavelength, velocity of propagation - Waveform distortion - the distortion-less line - Loading and different methods of loading - Line not terminated in Z0 - Reflection coefficient - calculation of current, voltage, power delivered and efficiency of transmission - Input and transfer impedance - Open and short circuited lines - reflection factor and reflection loss.

UNIT II HIGH FREQUENCY TRANSMISSION LINES 9

Transmission line equations at radio frequencies - Line of Zero dissipation - Voltage and current on the dissipation-less line, Standing Waves, Nodes, Standing Wave Ratio - Input impedance of the dissipation-less line - Open and short circuited lines - Power and impedance measurement on lines - Reflection losses - Measurement of VSWR and wavelength.

UNIT III IMPEDANCE MATCHING IN HIGH FREQUENCY LINES 9

Impedance matching: Quarter wave transformer - Impedance matching by stubs - Single stub and double stub matching - Smith chart - Solutions of problems using Smith chart - Single and double stub matching using Smith chart.

UNIT IV PASSIVE FILTERS 9

Characteristic impedance of symmetrical networks - filter fundamentals, Design of filters: Constant K - Low Pass, High Pass, Band Pass, Band Elimination, m- derived sections - low pass, high pass composite filters.

UNIT V WAVE GUIDES AND CAVITY RESONATORS 9

General Wave behaviors along uniform Guiding structures, Transverse Electromagnetic waves, Transverse Magnetic waves, Transverse Electric waves, TM and TE waves between parallel plates, TM and TE waves in Rectangular wave guides, Bessel's differential equation and Bessel function, TM and TE waves in Circular wave guides, Rectangular and circular cavity Resonators.

TEXT BOOKS

1. John D Ryder, "Networks, lines and fields", 2nd Edition, Prentice Hall India, 2010.

REFERENCES

1. E.C.Jordan and K.G. Balmain, ―Electromagnetic Waves and Radiating Systems‖ Prentice Hall of India, 2006.
2. G.S.N Raju "Electromagnetic Field Theory and Transmission Lines‖ Pearson Education, First edition 2005.

UNIT I TRANSMISSION LINE THEORY

PART-A

1. Define the line parameters?

The parameters of a transmission line are:

Resistance (R) ,Inductance (L) ,Capacitance (C) ,Conductance (G)

Resistance (R) is defined as the loop resistance per unit length of the wire. Its unit is ohm/Km
Inductance (L) is defined as the loop inductance per unit length of the wire. Its unit is Henry/Km
Capacitance (C) is defined as the loop capacitance per unit length of the wire. Its unit is Farad/Km
Conductance (G) is defined as the loop conductance per unit length of the wire. Its unit is mho/Km

2. What are the secondary constants of a line? Why the line parameters are called distributed elements?

The secondary constants of a line are:

Characteristic Impedance ,Propagation Constant . Since the line constants R, L, C, G are distributed through the entire length of the line, they are called as distributed elements. They are also called as primary constants.

3. Define Characteristic impedance

Characteristic impedance is the impedance measured at the sending end of the line. It is given by

$Z0 = \Gamma Z/Y$, where

$Z = R + j\omega L$ is the series impedance

$Y = G + j\omega C$ is the shunt admittance

4. Define Propagation constant

Propagation constant is defined as the natural logarithm of the ratio of the sending end current or voltage to the receiving end current or voltage of the line. It gives the manner in the wave is propagated along a line and specifies the variation of voltage and current in the line as a function of distance.

Propagation constant is a complex quantity and is expressed as

$\gamma = \alpha + j\,\beta$

The real part is called the attenuation constant whereas the imaginary part of propagation constant is called the phase constant.

5. What is a finite line? Write down the significance of this line?

A finite line is a line having a finite length on the line. It is a line, which is terminated, in its characteristic impedance (ZR=Z0), so the input impedance of the finite line is equal to the characteristic impedance (Zs=Z0).

6. What is an infinite line?

An infinite line is a line in which the length of the transmission line is infinite. A finite line, which is terminated in its characteristic impedance, is termed as infinite line. So for an infinite line, the input impedance is equivalent to the characteristic impedance.

7. What is wavelength of a line?

The distance the wave travels along the line while the phase angle is changing through 2π radians is called a wavelength.

8. What are the types of line distortions?

The distortions occurring in the transmission line are called waveform distortion or line distortion. Waveform distortion is of two types:

a) Frequency distortion
b) Phase or Delay Distortion.

9. How frequency distortion occurs in a line?

When a signal having many frequency components are transmitted along the line, all the frequencies will not have equal attenuation and hence the received end waveform will not be identical with the input waveform at the sending end because each frequency is having different attenuation. This type of distortion is called frequency distortion.

10. How to avoid the frequency distortion that occurs in the line?

In order to reduce frequency distortion occurring in the line,

a) The attenuation constant α should be made independent of frequency.
b) By using equalizers at the line terminals which minimize the frequency distortion.

Equalizers are networks whose frequency and phase characteristics are adjusted to be inverse to those of the lines, which result in a uniform frequency response over the desired frequency band, and hence the attenuation is equal for all the frequencies.

11. What is delay distortion?

When a signal having many frequency components are transmitted along the line, all the frequencies will not have same time of transmission, some frequencies being delayed more than others. So the received end waveform will not be identical with the input waveform at the sending end because some frequency components will be delayed more than those of other frequencies. This type of distortion is called phase or delay distortion.

12. How to avoid the frequency distortion that occurs in the line?

In order to reduce frequency distortion occurring in the line,

a) The phase constant β should be made dependent of frequency.
b) The velocity of propagation is independent of frequency.
c) By using equalizers at the line terminals which minimize the frequency distortion.

Equalizers are networks whose frequency and phase characteristics are adjusted to be inverse to those of the lines, which result in a uniform frequency response over the desired frequency band, and hence the phase is equal for all the frequencies.

13.What is a distortion less line? What is the condition for a distortion less line?

A line, which has neither frequency distortion nor phase distortion is called a distortion less line. The condition for a distortion less line is RC=LG. Also, a) The attenuation constant should be made independent of frequency. b) The phase constant should be made dependent of frequency.
d) The velocity of propagation is independent of frequency.

14.What is the drawback of using ordinary telephone cables?

In ordinary telephone cables, the wires are insulated with paper and twisted in pairs, therefore there will not be flux linkage between the wires, which results in negligible inductance, and conductance. If this is the case, the there occurs frequency and phase distortion in the line.

15.How the telephone line can be made a distortion less line?

For the telephone cable to be distortion less line, the inductance value should be increased by placing lumped inductors along the line.

16.What is Loading?

Loading is the process of increasing the inductance value by placing lumped inductors at specific intervals along the line, which avoids the distortion

17.What are the types of loading?

a) Continuous loading
b) Patch loading
c) Lumped loading

18.What is continuous loading?

Continuous loading is the process of increasing the inductance value by placing a iron core or a magnetic tape over the conductor of the line.

19.What is patch loading?

It is the process of using sections of continuously loaded cables separated by sections of unloaded cables which increases the inductance value

20. What is lumped loading?

Lumped loading is the process of increasing the inductance value by placing lumped inductors at specific intervals along the line, which avoids the distortion

21.Define reflection coefficient

Reflection Coefficient can be defined as the ratio of the reflected voltage to the incident voltage at the receiving end of the line Reflection Coefficient
K=Reflected Voltage at load /Incident voltage at the load

K=Vr/Vi

22. Define reflection loss

Reflection loss is defined as the number of nepers or decibels by which the current in the load under image matched conditions would exceed the current actually flowing in the load

24. Define the term insertion loss

The insertion loss of a line or network is defined as the number of nepers or decibels by which the current in the load is changed by the insertion .

Insertion loss=Current flowing in the load without insertion of the network/Current flowing in the load with insertion of the network

25. When reflection occurs in a line?

Reflection occurs because of the following cases:

1) When the load end is open circuited
2) When the load end is short-circuited
3) When the line is not terminated in its characteristic impedance

When the line is either open or short circuited, then there is not resistance at the receiving end to absorb all the power transmitted from the source end. Hence the entire power incident on the load gets completely reflected back to the source causing reflections in the line. When the line is terminated in its characteristic impedance, the load will absorb some power and some will be reflected back thus producing reflections.

26.What are the conditions for a perfect line? What is a smooth line?

For a perfect line, the resistance and the leakage conductance value were neglected. The conditions for a perfect line are R=G=0. A smooth line is one in which the load is terminated by its characteristic impedance and no reflections occur in such a line. It is also called as flat line.

PART-B

1. Derive the expression for voltage and current along a parallel wire transmission line and obtain its solution.
2. A cable has the following parameters.R=48.75Ω/km,L=1.09mh/km,C=0.059μF/km,G=38.75μmho/km. Determine the characteristic impedance, propagation constant and wavelength for a source of f=1600 Hz and Es=1V.
3. Explain in detail the waveform distortion and also derive the condition for distortionless line.
4. Explain the concept of reflection ona line which is not terminated in its characteristic impedance (Zo).
5. Derive the general solution of a transmission line.
6. A cable has the following parameters.R=10.4Ω/km,L=3.66mh/km,C=0.00835μF/km,G=0.08μmho/km. Determine the characteristic impedance, attenuation and phase constant and phase velocity.
7. A low loss transmission of 100 Ω characteristic impedance is connected to a load of 200Ω. Calculate the voltage reflection coefficient and the SWR.
8. Discuss the theory of open and short circuited lines with voltage and current distribution diagram and also get the input impedance expression.
9. If Z=R+jωL and Y=G+jωC show that the line parameter values fix the velocity of propagation for an ideal line.
10. Deduce the expression for characteristic impedance and propagation constant of a line os cascaded identical and symmetrical T section of impedance.
11. Derive the two useful forms of equation for voltage and current on a transmission line.

UNIT II HIGH FREQUENCY TRANSMISSION LINES

PART-A

1. **What is dissipation less line?**
   A line for which the effect of resistance R is completely neglected is called dissipation less line .

2. **What is the nature and value of Z0 for the dissipation less line?**
   For the dissipation less line, the Z0 is purely resistive and given by,
   Z0=R0 = (L/c) ½

3. **State the values of a and b for the dissipation less line.**
   α=0 and β=w (LC) ½

4. **What are nodes and antinodes on a line?**
   The points along the line where magnitude of voltage or current is zero are called nodes while the points along the lines where magnitude of voltage or current first maximum are called antinodes or loops.

5 .What is standing wave ratio?

The ratio of the maximum to minimum magnitudes of voltage or current on a line having standing waves called standing waves ratio.

6. What is the range of values of standing wave ratio?

The range of values of standing wave ratio is theoretically 1 to infinity.

7.State the relation between standing wave ratio and reflection coefficient.

$$S = \frac{1+|K|}{1-|K|}$$

8. What are standing waves?

If the transmission is not terminated in its characteristic impedance, then there will be two waves traveling along the line which gives rise to standing waves having fixed maxima and fixed minima.

9. Give the general equation for the input impedance of a dissipation line.

$Zs=Zo(Zr\cosh\gamma l+Zo\sinh\gamma l/ Zo\cosh\gamma l+Zr\sinh\gamma l)$

Where Zo= Characteristic impedance

Zr= Receiving end impedance

γ=Propagation constant and

l= length of the line from the sending end.

10. Write the expression for the characteristic impedance and propagation constant for the dissipation less line.

Propagation constant $\gamma=\sqrt{LC(G/C+jw)}$

Characteristic impedance $Z0=\sqrt{L/C}$

11. Determine the values of VSWR in the case of ZR=0 and ZR=Zo.

ZR=0 ; $|K|=1$, SWR=∞

ZR=Zo; $|K|=0$, SWR=1

12. How will you make standing wave measurements on coaxial lines?

For coaxial lines it is necessary to use a length of line in which a longitudinal slot, one half wavelength or more long has been cut. A wire probe is inserted into the air dielectric of the line as a pickup device, a vacuum tube voltmeter or other detector being connected between probe and sheath as an indicator.

If the meter provides linear indications, S is readily determined. If the indicator is non linear, corrections must be applied to the readings obtained.

13. Why the point of voltage minimum is measured rather than voltage maximum?

The point of a voltage minimum is measured rather than a voltage maximum because it is usually possible to determine the exact point of minimum voltage with greater accuracy.

14.Write the equation of SWR in terms of reflection coefficient.

$S=1+|K|/1-|K|$

15.Write the equation of reflection coefficient in terms of SWR.

$|K|=S-1/S+1$

S is SWR and K=reflection coefficient

16.What is the input impedance of a open circuit and short circuit line.

$Zs=Zoc=Zo\mathrm{Coth}\gamma l$

$Zs=Zsc=Zo\tanh\gamma l$

17.What is the need for loading.

The condition for distortionless line is L/C=R/G

To achieve this, L has to be increased. This can be done by loading. The need for loading is to make the transmission line a distortionless one.

18.Write the campbell's formula for propagation constant of a loaded line.

$\cosh\gamma' l=Zc/2Zo \sinh\gamma l+ \cosh\gamma l$

Zc=impedance of loading coil

Zo=Characteristic impedance

γ=Propagation constant and
l=distance between two loading coil.

19. When does reflection take place on a transmission line?

When the load impedance (Zr) is not equal to characteristic impedance (Zo) of the transmission line ie (Zr=Zo) reflection takes place.

20. What is Impedance matching?

If the load impedance is not equal to the source impedance, then all the power that are transmitted from the source will not reach the load end and hence some power is wasted. This is called impedance mismatch condition. So for proper maximum power transfer, the impedances in the sending and receiving end are matched. This is called impedance matching.

PART-B

1. Explain the condition for distortionless line. Characteristic impedance of a transmission line at 8 MHz is (40-2j) ohm and the propagation constant is (0.01 + j 0.18) per meter. Find the primary constants.

2. Discuss following :
   (i) Reflection on a line not terminated in Z0.
   (ii) Open and short circuited lines.
3. A transmission line has the following per unit length parameters : L = 0.1μ H, R =5 ohms, C = 300 pF and G = 0.01 mho. Calculate the propagation constant and characteristic impedance at 500 MHz.
4. Derive the conditions required for a distortionless line.
5. The characteristic impedance of a uniform transmission line is 2309.6 ohms at a frequency of 800 MHz. At this frequency, the propagation constant is 0.054(0.0366 + j 0.99). Determine Rand L.
6. Explain the reflection on lines not terminated in characteristic impedance with phasor diagrams. Define reflection coefficient and reflection loss.
7. Derive the general solution of a transmission line.
8. A transmission line has the following constants L = 3.66μ H, R =10.4 ohms, C = 0.00835 μ F and G = 0.08μmho. Calculate its characteristic impedance, attenuation and phase constant and phase velocity.
9. Discuss the theory of open and short circuited lines with voltage and current distribution diagrams and also get the input impedance expression.
10. A low losstransmission line of 100 ohms characteristic impedance is connected to a load of 200 ohm. Calculate the voltage reflection coefficient and the standing eave ratio.

UNIT III IMPEDANCE MATCHING IN HIGH FREQUENCY LINES

PART-A

1. **What is the use of eighth wave line?**

   An eighth wave line is used to transform any resistance to an impedance with a magnitude equal to root the line or to obtain a magnitude match between a resistance of any value and a source of Ro internal resistance.

2. **What are constant S circles?**

   The input impedance equation for a dissipation less line is expressed in terms of SWR (S) results in the form of a circle.

   These circles are called as constant S circle. Since the minimum value of S is unity, S circles surrounds the 1,0 point.

3. What are the advantages of double stub matching over single stub matching?

(i)Double stub matching does not require that the stub should be placed at definite point on the line like single stub matching.

(ii) Double stub matching requires only the length of the stubs being changed while the position of the stub over the transmission line can be arbitrary. This is a definite advantage over single stub matching.

4. List the applications of the smith chart.

The applications of the smith chart are,

(i) It is used to find the input impendence and input admittance of the line.

(ii) The smith chart may also be used for lossy lines and the locus of points on a line then follows a spiral path towards the chart center, due to attenuation.

(iii) In single stub matching

5. What are the limitations of single stub matching?

(i) It requires the stub should be placed at a definite point on the line.

(ii) It requires that two adjustment should be made, these being location and the length of the stub.

6. Why short circuited stub is preferred to an open circuited stub?

The short circuited stub is preferred because the length of stub is easily alterable by moving the short at any desired length of stub.

7. Distinguish between single and double stub matching.

single stub matching	double stub matching
It has one stub to match the transmission line impedance	It requires two stub for impedance matching
Length and location of the stub to be altered for matching.	It requires only to alter the length of stub for matching.
It requires stub should be placed on a definite place on a line.	The location of the stub is arbitrary.

8. Why is single stub matching inaccurate on coaxial line?

For a coaxial line it is not possible to determine the location of the voltage minimum without a slotted line section, so that the placement of the stub is extremely difficult at the required point. Hence the single stub matching is inaccurate on coaxial line.

9. What is the importance of a quarter wave line? Or Mention uses of quarter wave line?

The impedance of the quarter wave line is that it matches the load with the source and ensures that maximum power is being transmitted to load. The quarter wave line may be used as

(i)an impedance inverter.

(ii) Couple a transmission line to a resistive load such as antenna.

(iii) Serve as an insulator to support an open wire line.

10. Write down the expression to determine the length of the stub.

$l\ t=\lambda/2\pi\ \tan^{-1}1-|K|^2$

$2|K|$ (Or) $l\ t=\lambda/2\pi\ \tan^{-1}\sqrt{ZrZo}/(ZrZo)$

11. Write down the expression to determine the position of the stub.

$Ls= \lambda/2\pi\ [\phi+\pi-\cos-1|K|]$

$Ls= \lambda/2\pi \tan^{-1}\sqrt{Zr/Zo}$

ϕ= angle of reflection coefficient
λ= wavelength
Zr=load impedance
Zo=Charcteristic impedance.

12. Design a quarter wave transformer to match a load of 200Ω to a source resistance 500Ω. The operating frequency is 200MHz.

Given:
Zr=200Ω Zs=500Ω f=200MHz
$Zs=Ro^2/Zr$ $Ro=\sqrt{Zs.Zr}=\sqrt{(500)(200)}=316.22\Omega$

Input impedance of $\lambda/4$ transformer Ro= 316.22Ω
The frequency of operation f=200MHz.
Wavelength $\lambda=c/f=3X10^8/200X10^6=1.5m$
The length of the quarter wave lines=$\lambda/4$=1.5/4=0.375m

13. What is impedance matching.

If the load impedance is not equal to the source impedance, then all the power that are transmitted from the source will not reach the load and hence some power is wasted. So for proper maximum power transfer the impedances in the sending end and receiving end are matched. This is called impedance matching.

14. State the values of α and β for the dissipation less?

$\alpha=0$ and
$\beta=w(LC)^{1/2}$

15. What are nodes and anti nodes on a line?

The points along the line where magnitude of voltage or current is zero are called nodes.The points along the line where magnitude of voltage or current first maximum are called antinodes or loops.

16. What is SWR.

The ratio of maximum to minimum magnitudes of voltage or current on a line having standing waves is called the standing wave ratio(SWR).

$$SWR=|Vmax/Vmin|=|Imax/Imin|$$

17. What is the nature and value of Zo for the dissipationlessline.

For the dissipationless line the Zo is purely resistive and given by,
$Z0=Ro=(L/C)^{1/2}$

18. Give the input impedance of eighth wave line terminated in a pure resistance.

The input impedance of eighth waveline is given by
Zs=[Zr+jRo/Ro+jZr]
|Zs|=Ro.

19. Find the reflection coefficient and VSWR of a line having Ro=100Ω and Zr=100-j100Ω.

Zr=100-j100
Z0=Ro=100
K=Zr-Zo/Zr+Zo=100-j100-100/100-j100+100=0.4472∟-63.43

K=0.4472∟-63.43

The VSWR is given by
S=1+K/1-K=1+0.444472/1-0.4472=2.618

S= 2.618

20. A 50Ω line is terminated in a load Zr=90+j60Ω. Determine the reflction coefficient.

K=Zr-Zo/Zr+Zo=(90+j60)-50/(90+j60)+50

K=0.473∟33.11

PART-B

1. A 30 m long lossless transmission line with Z0 = 50 _ operating at 2 MHz is terminated with a load ZL = 60 + 40j _. If U = 0.6C on the line, find
   (i) Reflection coefficient (5)
   (ii) Standing wave ratio (5)
   (iii) Input impedance (6)
2. Discuss the following :
   (i) Impedance matching (8)
   (ii) Single and double stub matching. (8)
3. (i)Draw and explain the operation of quarter wave line. (8)
   (ii) It is required to match a 200 ohms load to a 300 ohms transmission line to reduce the SWR along the line to 1. What must be the characteristic impedance of the quarter wave transformer used for this purpose if it is directly connected to the load? (4)
   (iii) What are the drawbacks of single stub matching and open circuited stubs? (4)
4. (i) Draw and explain the principle of double stub matching. (8)
   (ii) A UHF lossless transmission line working at 1 GHz is connected to an unmatched line producing a voltage reflection coefficient of 0.5(0.866 + j 0.5). Calculate the length and position of the stub to match the line. (8)
5. An ideal loss less quarter wave transmission line of characteristic impedance 60ohm is terminated in a load impedance ZL. Give the value of the input impedance of the line when ZL=0, and 60 ohm.
6. Write the concepts of single and double stub matching.
7. Write the concept of quarter wave length line and half wave length line.
8. A 75 ohm lossless transmission line is terminated in a load impedance of ZL=(25+j50)ohm. Use the Smith Chart to find (i) Voltage reflection coefficient (ii) VSWR (iii) input impedance of the line given that the line is 3.3lamda long and(iv) input admittance of the line.
9. A 50ohm lossless feeder line is to be matched to an antenna with ZL=(75+j20)ohm at 100MHz using single shorted stub. Calculate the stub length and distance between the antenna and stub using Smith Chart.
10. Explain the procedure of double stub matching on a transmission line with an example.

UNIT IV PASSIVE FILTERS
PART-A

1. **What is symmetrical network?**
   A network is said to be symmetrical if the two series arms of a T network or shunt arms of a π network are equal.

2. **What is the characteristic impedance of T and π Symmetrical network.**
   For T network ZoT=√Z1Z2(1+Z1/4Z2)

For π network Zoπ=√Z1Z2/ 1+Z1/4Z2)

3. **Mention the condition for stop band and pass band of a filter.**

Stop band= Z1/4Z2< -1.
Pass band -1< Z1/4Z2< 0.

4. **What is the condition for occurrence of cutoff frequency of a filter?**

Z1/4Z2=0 whereZ1=0
Z1/4Z2=-1 Z1=-4Z2

5. **What are the advantages of constant K prototype filter?**

(i) Attenuation does not increase rapidly beyond cut-off frequencies.
(ii) Characteristic impedance varies widely in the pass band from its desired value.

6. **Write down the expression for frequency of infinite attenuation for m-derived low pass and high pass filters.**

For low pass filter, $f\infty=fc/\sqrt{1-m^2}$ where $fc=1/\pi\sqrt{LC}$ $0<m<1$
For high pass filter, , $f\infty=\sqrt{1-m^2}*fc$ where $fc=1/4\pi\sqrt{LC}$

7. **What are the salient features of crystal filter?**

The Crystal filter is made up of piezo electric crystal with high Q-factor.
(i) It acts as a narrow band filter.
(ii) It gives maximum output at resonance and minimum at anti resonance.

8. **Mention the advantages of m-derived filters.**

Attenuation rises near cut off frequency fc and its slope is adjustable by varying f∞.
The characteristic impedance will be uniform in the pass band when m-derived half section having m=0.6 is connected at the ends.

9. **What is a filter**

A circuit designed to perform this frequency selection is called a filter circuit, or simply a filter.

10. **What are the classification of filters**

high-pass, low-pass, bandpass, band-reject (bandreject;notch), or all-pass

11 .Define ampere.

A unit of attenuation used in transmission line theory; equivalent to 8.686 dB

12. Define Decibel

A measurement of transmission loss or gain in the form of a ratio between two voltages, currents, or powers. 3dB=double the power, 10dB=10timesthe power. Decibels relative to one watt or milli watt are abbreviated as dBw and dBm, respectively

13. Define Band Elimination Filter

An electric filter which transmits more or less uniformly at all frequencies of interest except for a band within which frequency components are largely attenuated. Also known as band-elimination filter; band-rejection filter.

14. Define low pass and high pass filters

A high-pass filter,or HPF, is an LTI filter that passes high frequencies well but attenuates (i.e.,reduces the amplitude of) frequencies lower than the filter's cut off frequency. The actual amountofattenuationforeachfrequencyisadesignparameterofthefilter.Itissometimes called alow-cut filter orbass-cut filter.

Alow-pass filter is a filter that passes low-frequency signals but attenuates signals with frequencies higher than the cutoff frequency. The actual amount of attenuation for each frequency varies from filter to filter.

15. What is the ladder structure of the filter network?

A band pass, elliptic function, microwave filter employs a network of parallel digits formingaladderlinethatisdisposedbetweenandspacedfromapairofgroundplane plates. Each digit is a half wavelength long at the filter's mid band frequency. Each digit is short circuited at both it sends to the ground planes and is stepped in impedance. Input and output coupling to the ladder line are accomplished by transformer digits located at the ends of the ladder line.

16. What is pass band?

A passband is the range of frequencies or wavelengths that can pass through a filter without being attenuated. A passband signal is a band pass filtered signal (that is, a signal whose lowest and highest frequencies have been filtered out), as opposed to a baseband signal.

17. What is stop band

A stop band is a band of frequencies, between specified limits, through which a circuit, such as a filter or telephone circuit, does not allow signals to pass, or the attenuation is above the required stopband attenuation level.

18. What is a prototype filter?

Prototype filters are electronic filter designs that are used as a template to produce a modified filter design for a particular application. They are an example of an on dimensionalised design from which the desired filter can be scaled or transformed

19. What is m-derived filters?

m-derived filters are type filters are atype of electronic filter designed using the image method. This filter type was originally intended for use with telephone

20. Define attenuator

An electrical device for attenuating the strength of an electrical signal

21. What are the uses of attenuators?

Fixed attenuators in circuits are used to lower voltage, dissipate power, and to improve Impedance matching.

PART-B

1. Derive the equation for the characteristic impedance of symmetrical T and π networks.
2. Discuss the properties of symmetrical network in trems of characteristic impedance and propagation constant.
3. With suitable filter sections, design constant –K lowpass and high pass filters. Calculate the values of the inductor and capacitor of a prototype constsnt k LPF composed of π section to operate with a terminating
4. Construct a band pass constsnt k filter.
5. Discuss the characteristics of symmetrical network.
6. Design an m derived T section LPF having design resistance R0 = 600 Ω , cutoff frequency fc = 1000 Hz and infinite attenuation frequency f∞=1050Hz.

7. Derive the general transmission line equation for voltage and current as point on a line.
8. Explain the properties and characteristics impedance of symmetrical networks.
9. Design T and ∏ section low pass filter which has series inductance 80 mHz and shunt capacitance 0.022 µf . Find the cutoff frequency and design impedance.
10. What are the advantages of m derived filter? Design an m derived low pass filter (T and ∏ section) having design resistance R0 = 500 Ω , cutoff frequency fc = 1500 Hz and infinite attenuation frequency f∞=2000Hz.
11. Derive the characteristic impedance impedance of symmetrical network (T and ∏ section).

UNIT V WAVE GUIDES AND CAVITY RESONATORS

1. What are the guided waves? Give examples.

The electromagnetic waves that are guided along or over conducting or dielectric surface are called guide waves.

Ex: parallel wire, transmission lines.

2. What is TE wave or H wave?

Transverse electric wave (TE) is a wave in which the electric field E is entirely transverse. It has a magnetic field strength Hz in the direction of propagation and no component of electric field Ez in the same direction.

3. What is TM wave or E wave?

Transverse magnetic wave (TM) is a wave in which the magnetic field H is entirely transverse. It has a electric field strength Ez in the direction of propagation and no component of magnetic field in the same direction

4. What is TEM wave or Principal wave?

It is a special type of TM Wave in which an electric field E along the direction of propagation is also Zero. The TEM waves are waves in both electric and magnetic fields are transverse entirely but have no components of Ez and Hz . It is also referred as the principal wave.

5. What is dominant mode?

The modes that have the lowest cut off frequency is called the dominant mode.

6. Mention the characteristics of TEM wave.

(i) It is a special type of TM Wave.
(ii) It doesnot have either E or H component.
(iii) Its velocity is dependent of frequency.
(iv) Its cutoff frequency is Zero.

7. Define attenuation factor.

Attenuation factor=$\frac{power\ lost}{unit\ length}$/[2 X Power transmitted]

8. Write down the expression for cut off frequency when the wave is propagated in between two parallel plates.

cut off frequency fc=$\frac{m}{2a\sqrt{\mu\varepsilon}}=\frac{mv}{2a}$

9. Write down the expression for wavelength when the wave is propagated in between two parallel plates.

Wavelength $\lambda c=2a/m$.

10. Write down the expression for guide wavelength when the wave is propagated in between two parallel plates.

Guide wavelength$=2\pi/\sqrt{\omega^2\mu\varepsilon-(m\pi/a)2}$

11. Write down the relationship between phase velocity and group velocity.

$Vp=V^2/Vg$ or

$VpVg=C^2$

12. Write down the relationship between the attenuation factor for TM and TM waves

$\alpha TE = (fc/f)2\ \alpha TM$.

13. Compare TE and TM mode.

TE	TM
TE wave in which the electric field E is entirely transverse.	TM wave in which the magnetic field H is entirely transverse.
It has a electric field component Hz in the direction of propagation and no component of magnetic field Ez in the same direction.	It has a magnetic field component Hz in the direction of propagation and no component of electric field Ez in the same direction.

14. What is the dominant mode in circular waveguide.Why?

The lowest order cutoff frequency is obtained only when n=1,m=1 i.e Pnm=1.841. Since this corresponding mode TE11 mode is called dominant mode.

15. A rectangular waveguide with dimensions a=8.5cm and b=4.3cm.Determine the cut off frequency for TM10 mode of propagation.

$fc=c/2\pi\sqrt{\left(\frac{m\pi}{a}\right)2+(n\pi/b)2}$

$C=3X10^8$,a=8.5cm,b=4.3cm,m=1,n=0

$fc=3X10^8/2\pi\sqrt{\left(\frac{\pi}{8.5}\right)2+0}$

$\boxed{fc=17.6MHz}$

16. What are the disadvantages of circular waveguide.

The frequency difference between the lowest frequency on dominant mode and the next mode is smaller than in a rectangular waveguide with

b/a=0.5

The circular symmetry of the waveguide may reflect on the possibility of the wave not maintaining its polarization throughout the length of the guide.

For the same operating frequency circular waveguide is bigger in then a rectangular waveguide.

17. List out the parameters describing the performance of a resonator.

(i) Resonatant frequency
(ii) Quality factor
(iii) Input impedance.

18. Calculate the cut off wavelength for the TM11 mode in a standard rectangular waveguide if a=4.5cm.

Cut off wavelength $(\lambda o)=\frac{2}{\sqrt{\left(\frac{m}{a}\right)2+(n/b)2}}$

m=1,n=1

$$(\lambda o)=\frac{2}{\sqrt{(1/a)2+(\frac{1}{a}/2)2}}=4.02cm$$

19. Define Skin depth

Skin depth is a measure of depth to which an EM Wave can penetrate the medium,

$$\delta=\frac{1}{\sqrt{\pi}+H\sigma}$$

20. Compare transmission line and waveguide.

Transmission line	Waveguide
May opearate from dc to very high frequency	It can operate only above certain frequency called cut off frequency
In efficient due to skin effect and dielectric loss	Larger bandwidth and lower attenuation.

21. An air filled resonant cavity wit dimensions a=5cm,b=4cm and c=10cm is made of copper. Find the resonant frequency for lowest order mode.

Given:

a=5cm, b=4cm,c=10cm

$$fr=c/2\sqrt{\left(\frac{m}{a}\right)2+\left(\frac{n}{b}\right)2+\left(\frac{p}{c}\right)2}$$

$$=\frac{3X10}{2}\sqrt{\left(\frac{1}{5X10-2}\right)2+(o)2+\left(\frac{1}{10X10-2}\right)2}$$

$$\boxed{Fr=3.335GHz}$$

22. What is the need for attenuator?

An attenuator is a device that reduces the amplitude or power of a signal without distorting its waveform. In transmission equipment's it is required to suppress or reduces the levels of current and voltage at certain points for which attenuators are used.

23. What are degenerate modes? Give 2 examples of such mode in rectangular guide.

Higher order modes having same cut off frequency but different field pattern are called degenerate modes. All Temn and TMmn modes are degenerate when m and n not are equal to zero.

Ex: TE23 and TM23.

24. Write the expression of β,fc,V of a TM wave in a circular waveguide.

$$\beta nm=\sqrt{\omega 2\mu\varepsilon-h2mn}$$

$$fc=hmn/2\pi\sqrt{\mu\varepsilon}$$

the first few root are (ha)01=2.405

(ha)02=5.52

(ha)11=3.85

(ha)12=7

$V=\omega/\sqrt{\omega^2\mu\varepsilon-h^2nm}$

25. What is the need for guided terminations?

To avoid reflection losses. The termination should provide a wave impedance equal to that of the transmission mode in the guide.

26. Define quality factor.

The quality factor, Q of a resonator is a measure of the bandwidth of the resonator and is defined as

$$Q=2\pi[\frac{maximum\ energy\ stored\ per\ cycle}{energy\ dissipated\ per\ cucle.}]$$

PART-B

1. Derive the expression for field strength for Te wave between a pair of parallel perfectly conducting planes of infinite extent in the Y and Z directions. The plates are separated in X direction by a meter.
2. Discuss the characteristics of TE and Tm waves and also derive cut off frequency and phase velocity from propagation constant.
3. A pair of parallel perfectly conducting planes are separated by 7cm in air and carries a signal with frequency of 6Ghz in TE mode. Find i) Cut-off frequency ii) phase Constant iii) Attenuation constant and phase constant for f=0.8fc iv) cut-off wavelength.
4. Explain the concept of transmission of TM waves and TEM waves between parallel plates.
5. Derive the relation among phase velocity,group velocity and free space velocity.
6. Design a T and ∏ type attenuator to give attenuation of 20db and to work in a line of 600Ω
7. Derive the equation that are the result of introduction of restrictions on time to maxwells equations.
8. Derive the field equations for TE waves between parallel planes.
9. Explain Tem and TM cases for attenuation with planes of finite conductivity.
10. Discuss the transmission of TM waves between parallel planes.
11. Write the instantaneous field expression for TM10 mode in parallel plate waveguides.
12. Discuss the transmission of TE waves between parallel planes.

Reg. No. : 1 1 0 3 1 3 1 0 6 3 0 2

Question Paper Code : 27201

B.E./B.Tech. DEGREE EXAMINATION, NOVEMBER/DECEMBER 2015.

Fifth Semester

Electronics and Communication Engineering

EC 6503 — TRANSMISSION LINES AND WAVE GUIDES

(Regulations 2013)

Time : Three hours Maximum : 100 marks

(Normalised Smith chart is to be provided)

Answer ALL questions.

PART A — (10 × 2 = 20 marks)

1. Find the reflection coefficient of a 50 Ω transmission line when it is terminated by a load impedance of 60+j40 Ω.

2. What is meant by distortion less line?

3. A lossless transmission line has a shunt capacitance of 100 pF/m and a series inductance of 4 μH/m. Determine the characteristic impedance.

4. For the line of zero dissipation, what will be the values of attenuation constant and characteristic impedance?

5. List the applications of a Quarter-wave line.

6. Distinguish between single stub and double stub matching.

7. Determine the value of L required by a constant-K T-section high pass filter with a cut off frequency of 1 KHz and design impedance of 600 Ω.

8. What are the advantages of m-derived filters?

9. A rectangular waveguide of cross section 5 cm × 2 cm is used to propagate TM_{11} mode at 10 GHz. Determine the cut-off wave length.

10. Write the applications of cavity resonators.

PART B — (5 × 16 = 80 marks)

11. (a) Derive and draw the m-derived T and Π section for low pass and high pass filter. (16)

Or

(b) Derive characteristic impedance, inductance, capacitance and cut-off frequency for constant k low pass and constant k highpass filter, also draw their reactance curves. (16)

12. (a) (i) Obtain the general solution of transmission line. (10)

(ii) A telephone cable 64 km long has a resistance of 13 Ω/km and a capacitance of 0.008 μF/km. Calculate attenuation constant, velocity and wavelength of the line at 1000 Hz. (6)

Or

(b) (i) Explain about different type of transmission line. (8)

(ii) Discuss the following : reflection loss and return loss. (8)

13. (a) (i) Derive the expression for the input impedance of the dissipationless line and thus obtain the expression for the input impedance of the quarter wave line. Also discuss the applications of the quarter wave line. (10)

(ii) Design a single stub match for a load of 150 + j 225 ohms for a 75 ohms line a 500 MHz using smith chart. (6)

Or

(b) Explain double stub matching on a transmission line and derive the expression and the length of the stub used for matching on a line. (16)

14. (a) Discuss the characteristics of TE and TM waves and also derive the cut off frequency and phase velocity from the propagation constant. (16)

Or

(b) (i) Derive field component of the wave propagation between parallel plates. (8)

(ii) Derive the expression of wave impedance of TE, TM and TEM wave between a pair of perfectly conducting planes. (8)

15. (a) (i) Explain about excitation modes in rectangular wave-guide. (10)

(ii) Calculate resonant frequency of an air filled rectangular resonator of dimensions $a = 3$ cm, $b = 2$ cm and $d = 4$ cm operating in TE_{101} mode. (6)

Or

(b) Explain the propagation of electromagnetic waves in a cylindrical waveguide with suitable expressions. (16)

———————

Reg. No. :

Question Paper Code : 51407

B.E./B.Tech. DEGREE EXAMINATION, MAY/JUNE 2014.

Fifth Semester

Electronics and Communication Engineering

EC 2305/EC 55 — TRANSMISSION LINES AND WAVEGUIDES

(Regulation 2008)

(Common to PTEC 2305 — Transmission Lines and Waveguides for B.E. (Part-Time) Fourth Semester Electronics and Communication Engineering – Regulation 2009)

Time : Three hours

Maximum : 100 marks

(Smith chart is to be provided)

Answer ALL questions.

PART A — (10 × 2 = 20 marks)

1. Write any two advantages of m-derived filters over constant-K filters.

2. Determine the value of L required by a constant-K T-section high pass filter with a cutoff frequency of 1.5 KHz and design impedance of 500 Ω.

3. A transmission line has a characteristic impedance of 600 Ω. Determine the magnitude of the reflection coefficient if the receiving end impedance is (650 – j 475) Ω.

4. Define insertion loss.

5. Give the equations for the characteristic impedance and propagation constant of a dissipationless line.

6. Mention the disadvantages of single stub matching.

7. A wave is propagated in the dominant mode in a parallel plane waveguide. The frequency is 6 GHz and the plane separation is 4 cm. Calculate the cutoff wavelength and the wavelength in the waveguide.

8. Give the equations for the propagation constant and wavelength for TEM waves between parallel planes.

9. What are the advantages and applications of cylindrical waveguides?

10. Mention the different types of guide termination.

PART B — (5 × 16 = 80 marks)

11. (a) (i) Explain in detail about the wave-form distortion and also derive the condition for distortion less line. (10)

(ii) Derive the expressions for input impedance of open and short circuited lines. (6)

Or

(b) (i) A parallel-wire transmission line is having the following line parameters at 5 KHz. Series resistance ($R = 2.59 \times 10^{-3}$ Ω/m), Series inductance ($L = 2\mu$H/m), Shunt conductance (G = 0 ℧/m) and capacitance between conductors (C = 5.56 nF/m). Find the characteristic impedance, attenuation constant, phase shift constant, velocity of propagation and wavelength. (10)

(ii) A 2 meter long transmission line with characteristic impedance of 60+j40 Ω is operating at $\omega = 10^6$ rad/sec has attenuation constant of 0 rad/m. If the line is terminated by a load of 20+j50Ω, determine the input impedance of this line. (6)

12. (a) Discuss the various parameters of open-wire and co-axial lines at radio frequency. (16)

Or

(b) (i) A lossless line in air having a characteristic impedance of 300 Ω is terminated in unknown impedance. The first voltage minimum is located at 15 cm from the load. The standing wave ratio is 3.3. Calculate the wavelength and terminated impedance. (6)

(ii) Derive the expression that permit easy measurements of power flow on a line of negligible losses. (10)

13. (a) (i) What is Quarter-wave line? (4)

(ii) A 75 Ω lossless transmission line is to be matched with a 100-j80 Ω load using single stub. Calculate the stub length and its distance from the load corresponding to the frequency of 30 MHz using Smith chart. (12)

Or

(b) (i) Discuss the principle of double stub matching with neat diagram. (8)

(ii) A 300 Ω transmission line is connected to a load impedance of (450-j600) Ω at 10 MHz. Find the position and length of a short circuited stub required to match the line using Smith chart. (8)

14. (a) (i) Explain the operation and design of constant-K T section band elimination filter with necessary equations and diagrams. (8)

(ii) Design a constant K band pass filter (both T and π sections) having a design impedance of 600 Ω and cut-off frequencies of 1 KHz and 4 KHz. (8)

Or

(b) (i) Design an m-derived T section low pass filter having cut off frequency of 1 KHz. Design impedance is 400 Ω and the resonant frequency is 1100 Hz. (4)

(ii) Derive the equations for the characteristic impedance of symmetrical T and π networks. (6)

(iii) Discuss the properties of symmetrical network in terms of characteristic impedance and propagation constant. (6)

15. (a) A rectangular air-filled copper waveguide with dimension 0.9 inch × 0.4 inch cross section and 12 inch length is operated at 9.2 GHz with a dominant mode. Find cut-off frequency, guide wave-length, phase velocity, characteristics impedance and the loss. (16)

Or

(b) (i) Using Bessel function derive the TE wave components in circular wave guides. (10)

(ii) Calculate the resonant frequency of an air filled rectangular resonator of dimensions a = 2 cm, b = 4 cm and d = 6 cm operating in TE_{101} mode. (6)

Reg. No. 1 1 0 3 1 3 1 0 6 0 3 1

Question Paper Code : 57294

B.E/B.Tech. DEGREE EXAMINATION, MAY/JUNE 2016

Fifth Semester

Electronics and Communication Engineering

EC 6503 – TRANSMISSION LINES AND WAVE GUIDES

(Regulations 2013)

Time : Three Hours **Maximum : 100 Marks**

(Normalised Smith chart is to be provided)

Answer ALL questions.

PART – A (10 × 2 = 20 Marks)

1. What is characteristics impedance ?
2. Define reflection loss.
3. What are the assumptions to simplify the analysis of line performance at high frequencies ?
4. Write the expression for standing wave ratio in terms of reflection co-efficient.
5. Why a quarter wave line is considered as a impedance inverter ? Justify.
6. What is a stub ? Why it is used in between transmission lines ?
7. What are the major draw backs of a constant – k prototype filter ?
8. Why a composite filter is designed and what are the various sections of the composite filter ?
9. Define dominant mode. What is the dominant mode of a rectangular wave guide ?
10. How a cavity resonator is formed ?

PART – B (5 × 16 = 80 Marks)

11. (a) (i) Derive the transmission line equation and hence obtain expression for voltage and current on a transmission line. **(10)**

(ii) Prove that an infinite line equal to finite line terminated in its characteristic impedance. **(6)**

OR

(b) A generator of 1 V, 1000 Hz supplies power to a 100 km open wire line terminated in Z_0 and having following parameters

R = 10.4 ohm per km G = 0.8×10^{-6} mho per Km

L = 0.00367 Henry per Km C = 0.00835 μF per Km

Calculate Z_0, α, β, λ, v. Also find the received power. **(16)**

12. (a) (i) Derive the line constants of a zero dissipationless line. **(8)**

(ii) A line with zero dissipation has

R = 0.006 ohm per m C = 4.45 pF per m

L = 2.5 μH per m

If the line is operated at 10 MHz find Ro α, β, λ, v. **(8)**

OR

(b) (i) Discuss in detail about the variation of Input Impedance along open and short circuit lines with relevant graphs. **(10)**

(ii) A loss less line has a Standing Wave ratio of 4. The R_0 is 150 ohms and the maximum voltage measured in the line is 135 V. Find the power delivered to the load. **(6)**

13. (a) (i) Prove that the input impedance of a quarter wave line is Zin $=R_0^2/ZR$. **(6)**

(ii) Design a quarter wave transformer to match a load of 200 ohms to a source resistance of 500 ohms. Operating frequency is 200 MHz. **(10)**

OR

(b) A load (50 – j 100) ohms is connected across a 50 ohms line. Design a short circuited Stub to provide matching between the two at a signal frequency of 30 MHz using Smith chart. **(16)**

14. (a) (i) Derive the design equations of a constant k low pass filter. **(8)**

(ii) A π section filter network consists of a series arm inductance of 20 mH and two shunt capacitor of 0.16 μF each. Calculate the cut off frequency, attenuation and phase shift at 15 KHz. What is the value of nominal impedance in the pass band ? **(8)**

OR

(b) Design a low pass composite filter to meet the following specifications $f_c = 2000$ Hz, $f_\infty = 2050$ Hz, $R_k = 500$ ohms. **(16)**

15. (a) Derive the field component of a Transverse Electric wave in Rectangular wave guides. **(16)**

OR

(b) For a frequency of 10 GHz and plane separation of 5 cm in air, find the cut off frequency, cut off wavelength, phase velocity and group velocity of the wave. **(16)**

Reg. No. :

Question Paper Code : 71456

B.E./B.Tech. DEGREE EXAMINATION, APRIL/MAY 2015.

Fifth Semester

Electronics and Communication Engineering

EC 2305/EC 55/10144 EC 504 — TRANSMISSION LINES AND WAVEGUIDES

(Regulation 2008/2010)

(Common to PTEC 2305 – Transmission Lines and Waveguides for B.E. (Part-Time) Fourth Semester Electronics and Communication Engineering – Regulation 2009)

Time : Three hours

Maximum : 100 marks

(Smith chart is to be provided)

Answer ALL questions.

PART A — (10 × 2 = 20 marks)

1. What are the disadvantages of constant–K filter?

2. Draw the equivalent circuit for a piezoelectric crystal.

3. What is the drawback of using ordinary telephone cables?

4. Define the term insertion loss.

5. How will you make standing wave measurements on coaxial line?

6. List the applications of the smith chart.

7. Define the terms phase velocity and group velocity.

8. What are the characteristics of TEM wave?

9. A rectangular waveguide has the following dimensions $l = 2.54$ cm, $b = 1.27$ cm and thickness = 0.127 cm. Calculate the cut-off frequency for TE_{11} mode.

10. What are the dominant mode and degenerate modes in rectangular waveguide?

PART B — (5 × 16 = 80 marks)

11. (a) (i) Draw and explain the design and operation of m-derived T-section bandpass filter with necessary equations and diagrams. (8)

(ii) Design constant-K bandstop filters (both T and π-sections) for the cutoff frequencies of 2 KHz and 6KHz. The design impedance is 500 Hz. (8)

Or

(b) (i) Explain the principle and operation of crystal filters with neat diagrams. (10)

(ii) Design an m-derived low pass filter with a cutoff frequency of 2 KHz. Design impedance is 500 Ω and m = 0.4. Consider a π-section for your calculation. (6)

12. (a) (i) What are the types of waveform distortion introduced by a transmission line? Derive the conditions for the distortionless operation of a transmission line. (10)

(ii) The constants of a transmission line are R = 6 Ω/km, L = 2.2 mH/km, C = 0.005 μF/km and G = 0.25×10^{-3} mhos/ km. Calculate the attenuation constant (α) and phase constant (β) at 1000 Hz. (6)

Or

(b) (i) Derive the transmission line equations and obtain expressions for the voltage and current on a transmission line. (10)

(ii) A transmission line has a characteristic impedance of (683 – j138) Ω. The propagation constant is (0.0074 + j 0.0356) per km. Determine the values of R and L of this line if the frequency is 1000 Hz. (6)

13. (a) (i) Derive an expression for the input impedance of a dissipationless line. Extend your results for open and short circuited lines also. (10)

(ii) Write a brief note on impedance measurement on transmission lines. (6)

Or

(b) (i) Discuss the principle of double stub matching with neat diagram and expressions. (8)

(ii) A single stub is to match a 300 Ω line to a load of (180 + j120) Ω. The wavelength is 2 meters. Determine the shortest distance from the load to the stub location and proper length of the short circuited stub using relevant formula. (8)

No 43

14. (a) Discuss the transmission of TM waves between parallel perfectly conducting planes with necessary expressions for the field components. Discuss the characteristics of TE and TM waves between the parallel planes. (16)

Or

(b) (i) Discuss briefly the attenuation of TE and TM waves between parallel planes. (8)

(ii) Describe the manner of wave travel between parallel planes with necessary expressions for their velocities. (8)

15. (a) (i) Describe the propagation of TE waves in a rectangular waveguide with necessary expressions for the field components. (10)

(ii) An air filled rectangular waveguide of dimensions a = 6 cm and b = 4 cm operates in the TM_{11} mode. Find the cutoff frequency, guide wavelength and phase velocity at a frequency of 3 GHz. (6)

Or

(b) (i) Describe the principle and operation of rectangular cavity resonators with relevant expressions. (10)

(ii) Give a brief note on excitation of modes in rectangular waveguides. (6)

51407

Reg. No. : | | | | | | | | | | | | |

Question Paper Code : 80344

B.E./B.Tech. DEGREE EXAMINATION, NOVEMBER/DECEMBER 2016.

Fifth Semester

Electronics and Communication Engineering

EC 6503 — TRANSMISSION LINES AND WAVE GUIDES

(Regulations 2013)

Time : Three hours Maximum : 100 marks

(Normalized Smith chart is to be provided)

Answer ALL questions.

PART A — (10 × 2 = 20 marks)

1. What is meant by distortionless line?

2. Find the Characteristic impedance of a line at 1600 HZ if $Z_{oc} = 750\angle -30^\circ\ \Omega$ and $Z_{sc} = 600\angle -20^\circ\ \Omega$.

3. Write the expression for the input impedance of open and short circuited dissipationless line.

4. Calculate Standing Wave Ratio and Reflection Coefficient on a line having the characteristic impedance $Z_0 = 300\Omega$ and terminating impedance in $Z_R = 300 + j400\Omega$.

5. Distinguish between Single Stub and Double Stub matching in a transmission line.

6. Give the application of eight wave line.

7. A constant-K, T-section high pass filter has a cut off frequency of 10 KH and the design impedance is 600 Ω. Determine the value of shunt inductance L and series Capacitance C.

8. Define propagation constant in a symmetrical network.

9. Justify, why TM_{01} and TM_{10} modes in a rectangular waveguide do not exit.

10. An air-filled rectangular waveguide of inner dimensions 2.286 × 1.016 in centimeters operates in the dominant TE_{10} modes. Calculate the cut-off frequency and phase velocity of a wave in the guide at a frequency of 7 GHz.

PART B — (5 × 16 = 80 marks)

11. (a) (i) Explain in detail about the reflection on a line not terminated by its characteristic impedance Z_0. (8)

(ii) Derive the condition for minimum attenuation in a distortionless line. (8)

Or

(b) A Communication line has L = 3.67 mH/km, G = 0.08 × 10^{-6} mhos/km, C = 0.0083 μF/km and R = 10.4 ohms/km. Determine the characteristic impedance, propagation constant, phase constant, velocity of propagation, sending end current and receiving end current for given frequency f = 1000 HZ, Sending end voltage is 1 volt and transmission line length is 100 kilometers. (16)

12. (a) (i) Derive an expression for the input impedance of a dissipationless line and also find the input impedance is maximum and minimum at a distance 's'. (8)

(ii) Find the sending end line impedance for a HF line having characteristic impedance of 50 Ω. The line is of length (1.185 λ) and is terminated in a load of (110 + j80) Ω. (8)

Or

(b) (i) Describe an experimental set up for the determination of VSWR of an RF transmission. (8)

(ii) Briefly explain on :

(1) Standing Waves

(2) Reflection loss. (4 + 4)

13. (a) (i) Determine length and location of a single short circuited stub to produce an impedance match on a transmission line with characteristic impedance of 600 Ω and terminated in 1800 Ω. (8)

(ii) Explain the operation of quarter wave transformer and mention it's important applications. (8)

Or

(b) (i) Find the sending end impedance of a line with negligible losses when characteristic impedance is 55 Ω and the load impedance is 115 + j75 Ω length of the line is 1.183 wave length by using smith chart . (10)

(ii) Explain the significance of smith chart and its application in a transmission lines. (6)

14. (a) What is m-Derived filter? Draw a m-Derived T-section and π-section low pass filter and explain the analysis of m-Derived low pass filter with respect to attenuation, phase shift and characteristic impedance with frequency profile respectively. (16)

Or

(b) What is composite filter? Design a constant-K-low pass filter (T-section and π-section) and having cut-off at which 2.5 KHz and design resistance R_0 is 700 Ω. Also find the frequency at which this filter produces attenuation of 19.1 dB. Find its characteristic impedances and phase constant at pass band and stop or attenuation band. (2 + 14)

15. (a) Derive an expression for the transmission of TE waves between parallel perfectly conducting planes for the field components. (16)

Or

(b) (i) Write a brief note on circular cavity resonator and its application. (8)

(ii) A TE_{11} wave is propagating through a circular waveguide. The diameter of the guide is 10 cm and the guide is air-filled. Given $X_{11} = 1.842$. (3)

(1) Find the cut-off frequency. (2)

(2) Find the wavelength λ_g in the guide for a frequency of 3 GHz. (3)

(3) Determine the wave impedance in the guide.

GE6351 ENVIRONMENTAL SCIENCE AND ENGINEERING

UNIT I ENVIRONMENT, ECOSYSTEMS AND BIODIVERSITY 12

Definition, scope and importance of Risk and hazards; Chemical hazards, Physical hazards, Biological hazards in the environment - concept of an ecosystem - structure and function of an ecosystem - producers, consumers and decomposers- Oxygen cycle and Nitrogen cycle - energy flow in the ecosystem - ecological succession processes - Introduction, types, characteristic features, structure and function of the (a) forest ecosystem (b) grassland ecosystem (c) desert ecosystem (d) aquatic ecosystems (ponds, streams, lakes, rivers, oceans, estuaries) - Introduction to biodiversity definition: genetic, species and ecosystem diversity - bio geographical classification of India - value of biodiversity: consumptive use, productive use, social, ethical, aesthetic and option values - Biodiversity at global, national and local levels - India as a mega- diversity nation - hot-spots of biodiversity - threats to biodiversity: habitat loss, poaching of wildlife, man-wildlife conflicts - endangered and endemic species of India - conservation of biodiversity: In-situ and ex-situ conservation of biodiversity. Field study of common plants, insects, birds Field study of simple ecosystems-pond, river, hillslopes, etc.

UNIT II ENVIRONMENTAL POLLUTION 10

Definition - causes, effects and control measures of: (a) Air pollution (Atmospheric chemistry- Chemical composition of the atmosphere; Chemical and photochemical reactions in the atmosphere - formation of smog, PAN, acid rain, oxygen and ozone chemistry;- Mitigation procedures- Control of particulate and gaseous emission, Control of SO2, NOX, CO and HC) (b) Water pollution : Physical and chemical properties of terrestrial and marine water and their environmental significance; Water quality parameters - physical, chemical and biological; absorption of heavy metals - Water treatment processes. (c) Soil pollution - soil waste management: causes, effects and control measures of municipal solid wastes - (d) Marine pollution (e) Noise pollution (f) Thermal pollution (g) Nuclear hazards-role of an individual in prevention of pollution - pollution case studies - Field study of local polluted site - Urban / Rural / Industrial/Agricultural.

UNIT III NATURAL RESOURCES 10

Forest resources: Use and over-exploitation, deforestation, case studies- timber extraction, mining, dams and their effects on forests and tribal people - Water resources: Use and overutilization of surface and ground water, dams-benefits and problems - Mineral resources: Use and exploitation, environmental effects of extracting and using mineral resources, case studies - Food resources: World food problems, changes caused by agriculture and overgrazing, effects of modern agriculture, fertilizer-pesticide

Problems, water logging, salinity, case studies - Energy resources: Growing energy needs, renewable and non-renewable energy sources, use of alternate energy sources. Energy Conversion processes - Biogas - production and uses, anaerobic digestion; case studies - Land resources: Land as a resource, land degradation, man induced landslides, soil erosion and desertification - role of an individual in

conservation of natural resources - Equitable use of resources for sustainable lifestyles. Introduction to Environmental Biochemistry: Proteins - Biochemical degradation of pollutants, Bioconversion of pollutants.Field study of local area to document environmental assets - river / forest / grassland / hill / mountain.

UNIT IV SOCIAL ISSUES AND THE ENVIRONMENT 7

From unsustainable to sustainable development - urban problems related to energy - water conservation, rain water harvesting, watershed management - resettlement and rehabilitation of people; its problems and concerns, case studies - role of non-governmental organization- environmental ethics: Issues and possible solutions - 12 Principles of green chemistry- nuclear accidents and holocaust, case studies. - wasteland reclamation - consumerism and waste products - environment production act - Air act - Water act - Wildlife protection act - Forest conservation act -The Biomedical Waste (Management and Handling) Rules; 1998 and amendments- scheme of labeling of environmentally friendly products (Eco mark). Enforcement machinery involved in environmental legislation- central and state pollution control boards- disaster management: floods, earthquake, cyclone and landslides.Public awareness.

UNIT V HUMAN POPULATION AND THE ENVIRONMENT 6

Population growth, variation among nations - population explosion - family welfare programme - environment and human health - human rights - value education - HIV / AIDS - women and child welfare -Environmental impact analysis (EIA)- -GIS-remote sensing-role of information technology in environment and human health - Case studies.

TOTAL: 45 PERIODS

TEXT BOOKS:

1. Gilbert M.Masters, 'Introduction to Environmental Engineering and Science', 2nd edition, Pearson Education, 2004
2. Benny Joseph, 'Environmental Science and Engineering', Tata McGraw Hill, New Delhi, 2006.

REFERENCES:

1. Trivedi R.K. 'Handbook of Environmental Laws, Rules, Guidelines, Compliances and Standards', Vol. I and II, Enviro Media.
2. Cunningham W.P.Cooper., T.H. Gorhani, 'Environmental Encyclopedia', Jaico Publishing House, Mumbai, 2001.
3. Dharmendra S. Sengar, 'Environmental law', Prentice hall of India PVT LTD, New Delhi, 2007.
4. Rajagopalan R, 'Environmental Studies - From Crisis to Cure', Oxford University Press, 2005

UNIT I – ENVIRONMENT, ECOSYSTEM AND BIODIVERSITY

2 Marks

1. Write the definition of environmental science and engineering.

Environmental science is the study of nature and the facts about environment. Basically environment can be defined as "all the social, economic, physical & chemical factors that surrounds man" (or) "all abiotic and biotic components around man-all living and nonliving things surrounds man".

2. Define environment.

'Environment' is derived from the French word ***Environner*** which means to encircle or surround. All the biological and non-biological things surrounding an organism are thus included in environment. Thus environment is sum total of water, air and land, inter-relationships among themselves and also with the human beings, other living organisms and property.

3. Write down the components of environment.

The components of environment can be broadly divided into two

1. Abiotic components - composed of all the nonliving components like temperature, water, minerals and gases etc
2. Biotic Components - composed of all the living components-plants, animals and micro-organisms.

The Abiotic components include: 1.Lithosphere 2. Hydrosphere 3. Atmosphere

The Biotic components include: 1, Producers 2. Consumers 3. Decomposers

4. Write notes on troposphere

This is the lowest layer of atmosphere. It extends up to 10-12km at mid latitudes, 5-6 km around poles and up to 18 km at equator. It contains water vapors, clouds and important gases like oxygen and nitrogen. The temperature in this region decreases at the rate of 5-7 degree centigrade per km.

5. Write notes on Stratosphere

This layer extends up to 50 km above the earth's surface. This is a stable layer and it consists of dry air. The main chemical species of this region is ozone. It protects human beings from ultra violet radiation, which are emitted from the sun.

6. Write notes on Thermosphere

This layer exists up to 500km above the earth's surface. The heating of the thermosphere is due to the absorption of solar energy by atomic oxygen. Within this layer is the relatively dense band of the charged particles called ionosphere. Worldwide communication is done using this layer.

7. Write the principles of environmental education.

1. Examine the major env. Issues
2. Discover the root cause
3. Develop problem solving skills
4. Promote co-operation in solving problems
5. Emphasis active participation in prevention and solution to problems.

8. Write the scope of environmental science.

1. Studying the interrelationship between the components of env.
2. Carrying out impact analysis and env. Audit
3. Preventing pollution from existing and new industries

4. Stopping the use of biological and nuclear weapons
5. Managing unpredictable disasters etc.

9. What are the reasons for environmental ignorance?

1. Science, technology and economics failed to integrate the knowledge on environmental aspects in curriculum
2. The decision makers do not process environmental angle of decision making
3. Consideration of economic growth, poverty eradication has led to environmental degradation
4. Only few developmental activities are made considering the environmental aspects.

10. Why there is need for public awareness?

The United Nations Conference on Environment and Development held at Reo de Janeiro in 1992 (popularly known as 'Earth Summit') and world summit on sustainable development at Johannesburg in 2002, have highlighted the key issues of global environmental concern. They have attracted the attention of people.

11. Write role of NGOs in public awareness.

1. Advise the government in interacting with ground level people
2. Organize public meetings to create environmental awareness

Eg: Recent report of 'center for science and environment' on permissible limits of pesticides in cola drinks.

12. Define ecosystem.

An ecosystem is defined as a natural functional ecological unit comprising of living organisms and their non-living environment that interact to form a stable self-supporting system.

Eg: Pond, lake, desert, grassland, forest, etc.

13. Why are plants called as producers?

The green plants have chlorophyll with the help of which they trap solar energy and change it into chemical energy of carbohydrates using simple inorganic compounds namely water and carbondioxide.As the green plants manufacture their own food they are known as Autotrophs.

14. Write the classification of biological environment.

1. Floral/Plant Environnent
2. Faunal /Animal Environnent
3. Microbial environment

15. What is the structural features of ecosystem?

Composition and organization of biological communities and abiotic components constitute the structure of an ecosystem

i) Biotic structure: - The plants, animals and microorganisms present in the ecosystems form the biotic component.

ii) Abiotic structure: - The physical and chemical components of an ecosystem constitute its abiotic structure. It includes climatic factors, soil factors, geographical factors, energy, nutrients and toxic substances.

16. What is meant by biotic structure?

The plants, animals and microorganisms present in the ecosystems form the biotic component. It is classified in to, a) Producers, b) Consumers and c) Decomposers

17. What is meant by abiotic structure?

The physical and chemical components of an ecosystem constitute its abiotic structure. It includes climatic factors, soil factors, geographical factors, energy, nutrients and toxic substances. They are classified in to a) Physical factors and b) Chemical factors.

18. What are called Producers?

Producers are mainly the green plants, which can synthesize their food themselves by making use of CO2 present in the air and water in the presence of sunlight by involving chlorophyll, through the process of photosynthesis. They are also known as photo autotrophs.

19. What are called consumers?

All organisms which get their organic food by feeding upon other organisms are called consumers. The consumers are of the following types,

a) Herbivores
b) Carnivores
c) Omnivores
d) Detritivores

20. What are called Decomposers?

They derive their nutrition by breaking down the complex organic molecules to simpler organic compounds and ultimately in to inorganic nutrients. Various bacteria and fungi are decomposers.

21. Define ecology.

Ecology is defined as the study of relationship between organisms and their environment.

22. Define energy flow in an ecosystem.

The flow of energy from one trophic level to next trophic level with in an ecosystem is called energy flow in an eco-system.

23. Explain food chain

In food chain each organism eats the smaller organism and is eaten by the larger ones. All these organisms which are interlinked with each other through food together constitute a food chain.

24. What is meant by Grazing food chain?

It starts with green plants (primary producers) and culminates in carnivores.

Eg: Grass-grasshopper-Frog-Snake-Hawk.

25. What is meant by Detritus food chain?

It starts with dead organic matter which the detritivores and decomposers consume. Partially decomposed organic matter and even the decomposers are consumed by detritivores and their predators.

Eg: - Leaf litter-algae-crabs-small carnivore's fish-large carnivorous fish

(Mangrove ecosystem)

Dead organic matter-fungi-bacteria

26. Explain food web.

Various food chains are often interlinked at different trophic levels to form a complex interaction between different species from the point of view of food. This network is called the food web.

27. Define nutrient cycle/ Bio-geochemical cycle/ material cycle.

The cyclic exchange of nutrient material between the living organisms and their non-living environment is called nutrient cycle. As indicated by the name, the nutrients circulate through life (bio) and through earth (geo) repeatedly (cycle)

28. Name some of natural impacts on environment.

Some of the natural impacts are

1. Earthquake 2. Tsunamis 3. Flood 4. Volcanic eruption.

29. Name some of the anthropogenic impacts on environment.

1. London Smog 2. Mediterranean a dead sea 3.Nuclear explosions 4.Minamata disease 5.Bhopal disaster 6.Chernobyl disaster 7. Gulf war hazards

30. Define sustainable development

Sustainable development can be summarized as 'meeting the needs of the present without compromising the ability of future generations to meet their own needs.

31. Explain the concept of sustainable development

The concept of sustainable development has the following underlying promises.

1. A symbiotic relationship between the consumer human race and the producer natural system.
2. Compatibility between ecology and economics.

32. Write short notes on photosynthesis.

The process by which chlorophyll bearing plants use energy from the sun to convert carbon dioxide and water into sugars is called photosynthesis.

33. Define mole.

Mole is defined as the amount of substance present in a material. The term mole can be applied to any particle. In general it is the ratio between mass and molecular weight of a particle.

34. Define biodiversity.

Biodiversity is the abbreviated word for "biological diversity" (bio-life or living organisms, diversity-variety). Thus biodiversity is the total variety of life on our planet, the total number of races, varieties and species. The sum of total of various types of microbes, plants and animals (producers, consumers and decomposers) in a system.

The concept of biodiversity may be analyzed in 3 different levels. They are

1 ecosystem diversity 2 species diversity 3 genetic diversity

35. Define species diversity.

Species diversity describes the number of kinds of organisms within individual communities or ecosystems.

36. Define genetic diversity.

Genetic diversity is a measure of the variety of versions of same gene within individual species.

37. Define Biodiversity Hotspots:

Most of the world's biodiversity are near the equator especially tropical rain forest and coral reefs. Of all the world's species, only 10-15% live in North America and Europe.

The Malaysian Peninsula, for instance, has at least 8000 species of flowing plants, while Britain, with an area twice as large, has only 1400 species. South America has 200 000 species of plants.

38. Define significance of biodiversity:

a) Biosphere is a life supporting system to the human race. Each species in the biosphere has its own significance.
b) It is the combination of different organisms that enables the biosphere to sustain human race.
c) Biodiversity is vital for a healthy biosphere.
d) Biodiversity is must for the stability and proper functioning of the biosphere.

39. Define endangered species.

The species which are under immediate danger of extinction.

40. Write notes on in-situ conservation.

_ Conservation of species in its natural habitat, in place where the species normally occurs
_ the strategy involves establishing small or large protected areas, called protected areas
_ today in world, there are 9800 protected areas and 1500 national parks

41. Write notes on ex-situ conservation.

It involves maintenance and breeding of endangered plant and animal species underpartially or wholly controlled conditions in zoos, gardens and laboratories.

42. Write the importance features of Indian law for conservation of biodiversity.

The wild life (protection) Act 1972:
Enacted
1. To protect wild animals and birds which are in the verge of extinction
2. To protect biological diversity in particular and environmental protection in general.
3. For the protection of wild animals and birds and for all other matters connected there of or ancillary and incidental there to.

43. What are the threats to biodiversity?

(i) Habitat loss (ii) Hunting (iii) Fragmentation (iv) Over harvesting**.**

16 Marks

01. Give an account of energy flow in ecosystems [Dec‟2009/8M]
02. Describe the biotic component of an ecosystem. [Dec‟2009/8M]
03. Discuss the importance of biodiversity. [Dec‟2009/8M]
04. Write informative notes on In-situ conservation. [Dec‟2009/8M, Nov‟2011/8M]
05. Explain the structure and function of Ecosystem with a neat sketch.[May‟2010/16M,Nov‟10/8M]
06. Explain the values of biodiversity. [May‟2010/16M, Nov‟10/8M]
07. Write down the ecological succession and ecological pyramids. [Nov‟10/8M]
08. Write about in-situ and ex-situ conservation of biodiversity. [Nov‟10/8M]
09. Explain the structure and functions of the following [i] Forest Ecosystem [ii] Grasslands ecosystem [iii] Desert ecosystem [iv] Aquatic ecosystem [May‟2011/16M]
10. Discuss the biodiversity at global, national and local levels. [May‟2011/16M]
11. Discuss the universal model of energy flow in an ecosystem and explain how the flow of energy follows the I and II law of thermodynamics. [Nov‟2011/8M]
12. What are ecological pyramids? Explain why in grassland ecosystems the pyramids of numbers are upright while in parasitic food chain it is inverted? [Nov‟2011/8M]

13. What are the major causes of man-wildlife conflicts? Discuss the remedial steps that can curb the conflict. [Nov ‟2011/8M]
14. Explain the following. Food Chain, Food Web
15. Explain features and functions of Grass land ecosystem.
6. Explain features and functions of Aquatic ecosystem.
17. Explain the various threats of biodiversity and the measures recommended for conservation of biodiversity.
18. Explain the hot spots of biodiversity in India.
19. Explain how the biodiversity can be conserved.

UNIT II – ENVIRONMENTAL POLLUTION

1. Define pollution.

"The unfavorable alteration of our surroundings" is called pollution.

2 Define Air pollution.

Air pollution may be defined as the presence of impurities in excessive quantity andduration to cause adverse effects on plants, animals, human beings and materials.

3. What are the different sources of air pollution?

The two main sources of air pollution are

A. Natural Sources

B.Man made or anthropogenic sources

Natural sources include dust storms, volcanoes, lightening sea salt, smoke, forest fires, etc., the man made sources are agricultural activities, industrial growth,domestic wastes, automobile exhausts, etc.

4. What do you know about particulate?

In general the term 'particulate' refers to all atmospheric substances that are notgases. They can be suspended droplets or solid particles or mixtures of the two.Particulates can be composed of materials ranging in size from 100mm down 0.1 mm andless. The chemical composition of particulate pollutants is very much dependent upon theorigin of the particulate.

5. Define suspended particulate matter?

Suspended Particulate Matter (SPM) is a complex mixture of small and large particles with size less than 100u varying origin and chemical composition.

6. Differentiate between Mist and Fog.

Mist

Mist is made up of liquid droplets generally smaller than 10um which areformedbycondensation in the atmosphere or are released from industrial operations.

Fog

Fog is similar to mist but the droplet size bigger (> 10u) and water is theliquid. Fog is sufficiently dense to incomprehensible vision.

7. What are gaseous pollutants?

These are toxic and poisonous gases such as carbon monoxide, chlorine, ammonia, hydrogen sulphate, sulphur dioxide, nitrogen oxides and carbon dioxide.

8. What are the major sources of air pollution from automobiles?

The major sources of air pollution from automobiles are

1. Exhaust pipe ->70%
2. Crank case emission ->20%
3. Evaporations from fuel tank and Carburetor ->10%

9. What are effects of air pollution on animals?

1. Animals take up fluorides of air through plants.
2. Their milk production falls and their teeth and bones are affected. They are also prone to lead poisoning andparalysis.

10. List some of the effects of air pollution on physical properties of

1. Atmosphere. 2. Decrease in the visibility 3. Reduction of Solar radiation
4. Effects on weather conditions 5.Effects on atmospheric constituents

11. How air pollution can be controlled at source?

_ Proper use of the existing equipment
_ Change in process
_ Modification or Replacement of equipment's
_ Installation of controlling equipment's

12. What are the particulate control equipment?

_ Gravitational settling chambers
_ Cyclone separators
_ Fabric filters (or) Bag filters
_ Electrostatic precipitators
_ Wet scrubbers (or) Wet collectors

13. Define water pollution.

Water pollution is defined as any physical, chemical or biological change inquality of water that has a harmful effect on living organisms or makes the waterunsuitable for needs.

14. How can you differentiate point? Source from non-point source ofpollution.

Point sources discharge pollutant at a specific place through pipe lines, sewerlines, or ditches into water bodies. Non point sources discharge pollutants from largeand scattered area. These sources have no specific location.

15. What are the effects of inorganic substances in water?

_ makes the water unfit for drinking and other purposes.
_ Corrosion of metals exposed to such waters.
_ causes skin cancers, damages to spinal, CNS, liver and kidneys.
_ Reduces crop yield.

16. Define soil pollution.

Soil pollution is defined as the introduction of substances, biological organisms,or energy into the soil, resulting in a change of the soil quality, which is likely toaffect the normal use of the soil or endangering public health and the livingenvironment.

17. What is the cause of noise pollution?

_ Road traffic noise
_ Air traffic noise

_ Rail traffic noise
_ Domestic noise
_ Industrial noise

18. Define a) Decibel b) COD

a) Decibel:-Decibel (dB) is defined as the one tenth of the longest unit Bel.

b) COD:-COD (Chemical Oxygen Demand) is the amount oxygen required for Chemical oxidation of organic matter using some oxidizing agent like K2Cr2O7 and KmnO4.

19. What are solid wastes? How solid wastes are disposed ultimately?

The wastes generated and discarded from human and animal activities that arenormally solid are called as solid wastes. Solid wastes are disposed bylandfill, incineration, composting methods.

20. Differentiate between primary and secondary air pollutants withexamples:

Primary pollutants

These are emitted directly in the atmosphere inharmful form.

Examples: CO, NO, SO2

Secondary pollutants

These are pollutants in which some of the primaryairpollutants may react with oneanother to form new pollutants

Examples:

NO, NO2------ıHNO3/NO3

21. What are point sources of water pollution?

Point sources are discharged pollutants at specific location through pipes ditches, sewers into bodies of surface water.

22. Define noise pollution.

The unwanted, unpleasant or disagreeable sound that causes discomfort for all living beings.

23. Define thermal pollution.

Thermal pollution is defined as the addition of excess of undesirable heat to water that makes it harmful to man, animal or aquatic life.

24. Name some important natural sources for nuclear hazards.

1. The important natural source is space, which emit cosmic rays.
2. Soil, rocks, air, water, food, radioactive radan – 222

25. Define hazardous wastes

Wastes like chemicals, radioactive or biological substances which contribute to an increase in mortality are called hazardous wastes.

26. What are the types of solid wastes?

1. Municipal wastes. 2. Industrial wastes. 3. Hazardous wastes.

27. Write any major water pollutants.

1. Pesticides and biocides.
2. Thermal pollution.

28. Define photochemical smog.

The brownish smoke like appearance that frequently on clear, sunny days with significant amounts of automobile traffic.

29. Mention some important control measures of nuclear hazards.

1. Minimum number of nuclear installations should be commissioned.
2. Nuclear devices should be exploded underground.

30. Define disaster.

It is an event in which a society undergoes severe danger and causes loss of its members and physical properties.

31. Define floods.

Whenever the magnitude of water flow exceeds the carrying capacity of the channel within its banks the excess of water over flows on the surroundings causes floods.

32. Explain cyclone management

1. Satellite images are used by meteorological departments for forecasting the weather conditions which reveal the strength and intensity of the storm.
2. Radar system is used to detect the cyclone and its being used for cyclone warning
3. For observing the exact location of cyclone every half an hour satellite pictures are analyzed.

33. How does earthquake occurs

The earth's crust has several tectonic plates of solid rock. These plates move slowly along their boundaries. When friction prevents these plates from slipping stress develops and results in sudden fractures along the fault lines within the plates. This causes earthquakes and the violent vibrations in the earth.

34. Define the term Tsunami

A tsunami is a large wave that are generated in a water body when the sea floor is deformed by seismic activity. This activity displaces the overlying water in the ocean.

35. Write the causes of soil pollution

1. Industrial wastes 2.Urban wastes.

UNIT II- ENVIRONMENTAL POLLUTION

1. What is noise? Describe briefly the effects of noise on human health. [Nov‟2009/8M]
2. Suggest measures to control air pollution. [Nov‟2009/8M]
3. Write short notes on Land filling method for solid waste. [Nov‟2009/8M]
4. Write short notes on Disaster management. [Nov‟2009/8M]
5. Discuss the method of solid waste management by sanitary land filling and thermal means. [May‟2010/16M]
6. Explain various disaster management measures during cyclone, floods, earthquake and landslides. [May‟ 2010/16M]
7. What do you know about Tsunami? Explain the formation of tsunami. [Nov‟2010/8M]
8. Explain the different stages of municipal sewage treatment. [Nov‟2010/8M]
9. Explain clearly the stages of solid waste management. [Nov‟2010/8M]
10. Explain the sources and effects of thermal pollution. [Nov‟2010/8M]
11. Explain the control and prevention measures of municipal solid waste in your area.[May‟2011/16M]
12. Write about one of the industrial waste water treatment techniques, with a neat schematic diagram. [May‟ 2011/16M]
13. Discuss the various sources of marine pollution. How can you prevent pollution of our oceans? [Nov‟2011/8M]
14. How solid wastes are are classified? Write the sources of urban and industrial solid wastes. [Nov‟2011/8M]

15. Briefly describe the sources, effect and prevention of soil pollution. [Nov‟2011/8M]
16. Explain the mitigation measures for landslides. [Nov‟2011/8M]
17. Explain the causes, effects and control measures of nuclear hazards.

UNIT III – NATURAL RESOURCES

1. State the environmental effects of extracting and using mineral resources.

(i) De vegetation and defacing of landscape.
(ii) Ground water contamination.
(iii) Surface water pollution
(iv) Air pollution.
(v) Subsidence of land.

2. Define sustainable forestry?

Sustainable forestry is the optimum use of forest resources, which meet the needs of the present without compressing the ability of future generations to meet their own needs.

3. Define overgrazing (or) explain overgrazing.

Overgrazing is a process of, "eating away the forest vegetation without giving it a chance to regenerate".

4. What are the renewable and non-renewable energy resources? Give examples.

Renewable energy resources are natural resources which can be regenerated continuously and are inexhaustible. They can be used again and again in an endless manner.

Examples:

Renewable energy sources: wood, solar energy, wing energy.

Non-renewable energy resources: coal, petroleum.

5. State the problems caused by the construction of Dam.

(a) Displacement of tribal people.
(b) Loss of non-forest land.
(c) Loss of forests, flora and fauna.

6. What are the conventional sources of energy for the mankind?

Non – renewable energy resources are natural resources, which cannot be regenerated once they are exhausted. They cannot be used again.

7. What is desertification? Give two reasons for it.

It is a progressive destruction of degradation of arid or semi-arid lands to desert.

Reasons: 1. Desertification 2. Overgrazing 3.Mining 4. Quarrying

8. What is water logging?

Water logging is the land where water stand for most of the year.

9. What do you mean by environmental impact? (Or) Define environmental impact statement.

Environmental impact is nothing but the effect on the natural environment caused by various human actions. (Or) It is defined as an analysis of the expected effects of a development on the surrounding environment. It describes the environmental effects and solutions.

It includes two types

(i) Indirect effects ***Example:*** Pollution.

(ii) Direct effects ***Example:*** Cutting down trees.

10. Explain soil leaching.

The process in which materials in or on the soil gradually dissolve and are carried by water seeping through the soil.

Effect of soil leaching:

1. It removes valuable nutrients from the soil.
2. It may carry buried wastes into ground water and contaminates it.

11. Write any two functions of forests.

1. Forests perform very important functions both to humans and to nature.
2. They are habitats to millions of plants, animals and wildlife.
3. They recycle rainwater and remove pollutants from air.
4. They control water quality and quantity.

12. What are the causes of deforestation?

(i) Developmental projects. (ii) Mining operations. (iii) Raw-materials for industries.

(iv) Fuel requirements.(v) Shifting cultivation. (vi) Forest fires.

13. What are the advantages in conjunctive use of water?

(i) Control of water logging. (ii) Use of saline water, especially for cooling purpose.

(iii) Control of salt intrusion in coastal aquifers. (iv) Controlled withdrawal of water from ground water aquifer.

14. What is meant by soil erosion?

Soil erosion is the process of removal of superficial layer of the soil from oneplace to another. Soil erosion also removes the soil components and surface liter.

15. Write any two adverse effects caused by overgrazing.

(i) Land degradation.

(ii) Soil erosion.

(iii) Loss of useful species.

17. Define the term deforestation.

Deforestation is the process of removal (or) elimination of forest resources due to many natural or man-made activities. In general deforestation means destruction of forests.

18. Differentiate renewable and non-renewable sources of energy.

Renewable energy

1. It is regenerated continuously.
2. In exhaustible.
3. It can be used again and again
4. It is pollution free.
5. Available in limited amount in nature
6. It is developed in a long period.
7. Example: Wood, Solar energy, Windenergy.

Non-renewable energy

1. Cannot be regenerated.

2. Exhausted.
3. Cannot be used again.
4. It pollutes the atmosphere.
5. Available in unlimited amount innature.
6. It is developed in a short period.
7. Example: Coal, petroleum, nuclear fuel.

19. Mention the various causes of desertification.

1. Deforestation 2. Over grazing 3.Water management 4.Mining and quarrying 5. Climate change 6. Pollution.

20. What is eutrophication?

A large proportion of N and P fertilizers used in crop fields is washed off by the runoff water and reaches the water bodies causing over nourishment of the lakes. The process of accumulation of nutrients in the water bodies is called eutrophication.

UNIT III - NATURAL RESOURCES

1. Discuss in detail the causes and consequences of overexploitation of forest resources. [Dec‟2009/8M, Nov‟2010/8M]
2. Give a brief account of renewable energy resources and their significance.[Dec‟2009/8M]
3. Explain the various renewable energy sources in the earth. [May 2010/16M]
4. Discuss the following. Land Resources, Land Degradation, Soil erosion and Desertification. [May 2010/16M, Nov‟2010/8M]
5. Explain the various conventional energy sources. [Nov‟2010/8M]
6. Explain the following in detail- Mineral resources and Food resources. [Nov‟2010/8M]
7. What are the natural resources availability in India and discuss any two of them. [May 2011/16M]
8. Discuss the world food problems in detail and how does it affect other resources? [May 2011/16M]
9. Explain the basic types of soil erosion and agents responsible for soil erosion. What are the conservation practices employed to prevent soil erosion? [Nov 2011/16M]
10. What is land degradation? Explain factors responsible and controlling measures of land degradation.
11. Explain desertification and its consequences. How it can be managed?
12. Explain equitable use of resources for sustainable lifestyles.

UNIT IV - SOCIAL ISSUES AND THE ENVIRONMENT

1. Define "Sustainable Development "?

Meeting the needs of the present without compromising the ability of future generation to meet their own needs.

2. Write the objectives of consumerisation?

1. Improves rights and power of the buyers2. Making the manufacturer liable3. Reuse and recycle the product4. Reclaiming useful parts5.Reusable packing materials6.Health and happiness.

3. Explain the need for water conservation?

1. Due to deforestation the annual rainfall is decreased.
2. Over exploitation of ground water leads to drought.

4. List some of the characteristics of a sustainable society.

i. All the material processes will be designed to be of cyclic nature.
ii. There will not be any waste material or pollution of air, water, land and environment.
iii. The output from one system will be used as input to other systems.
iv. Only renewable energy will be used in the society, either directly or in the forms of hydro-power, wind power solar power and biomass.
v. The human population will be either stable stable in size or gradually declining.

4. Explain the factor affecting water shed?

1. Over grazing, Mining, Deforestation, Construction activities
2. Droughty climates.

5. Define urbanization.

Urbanization is defined as 'the process movement of human population from ruralareas to urban areas in search in search of better economic interests with better education,communication, health, civic facilities and other day to day needs.

6. What are problems or discomforts faced by rural people?

. Lack of modernization of agricultural sector:
. Lack of job opportunities;
. Poor life style;
. Poor health facilities;
. Poor education facilities;
. Poor transportation facilities;
. Poor availability of energy.

7. What are the uses of energy in an urban areas?

Energy is used in an urban area for the following.
(a) For industrial activities
(b) For transportation
(c) For water apply
(d) For building & commercial use
(e) For cleaning of pollutants
(f) For essential services.

8. Define Environmental Ethics?

Environmental Ethics refers to principle, issues and guidelines relating to human interaction with their environments.

9. What do you know about watershed?

A watershed is defined as the geographic area from which water in a particular stream, lake or estuary originates. It includes entire area of land that drains into the water body. It is separate from other system by high points in the area such as hills or slopes.

10. What are the effects of global warming?

Sea level increases, Negative effect on crop production and forest growth.

11. What are the impacts of human activities on watershed?

(a) Alteration of water courseb) Addition of pollution sources(c) Urbanization

(d) Securing of channels.

12. What is watershed management?

Watershed management is a process aimed at protecting and restoring the habitat and Water resources of a watershed, incorporating the needs of multiple stakeholders.

13. What are the causes of ozone layer depletion?

1 .Chlorofluorocarbon 2.Hydro Chlorofluorocarbon 3.Bromoflurocarbon.

14. What are the two important principles of watershed management?

The two important principles of watershed management are:

1) To preserve the environment, and

2) To use the most cost-effective means to achieve this goal.

15. What are the causes of ozone layer depletion?

1. UV rays destroys the melanin pigment in human skin.
2. Increases the average temperature of the earth.

16 .What is Acid Rain?

The presence of SO 2 & NO2 gases in the atmosphere decreases the pH of the water during the rain fall. This precipitation is called Acid Rain.

17. Name some of the factors causing relocation of people.

(a) Development activities

(b) Natural and man-made disasters

(c) Conservation initiatives.

18 .How CFCs are accumulated in atmosphere?

Aerosol propellants,refrigerants, cleaning solvents

19. Define resettlement and rehabilitation.

Resettlement is defined as the process of simple relocation or displacement of human population without considering their individual, community or societal needs. Rehabilitation is defined as the process of replacing the lost economic assets, rebuilding the community system that have been weakened by displacement, attending to the psychological trauma of forced separation from livelihood.

20. Explain the term Global Warming?

The increase input of CO2 and other greenhouse gases into the atmosphere from human activities will enhance the average global temperature of the atmosphere. This enhanced greenhouse effect is called global warming.

21 .What are the advantage of Rain water harvesting?

1. Mitigating the effects of droughts
2. Rise in ground water level
3. Minimizing soil erosion and flood hazards

22. How do you define term 'Environmental Ethics'?

Environment Ethics is the branch of ethics which is analyzing about human use or Earth's limited resources.

23. What is meant by greenhouses gases?

They are gases present in the atmosphere which absorb heat but will not radiate, cause increase in atmospheric temperature.

24. What are the factors that influence climate change on the earth?

1. Climate change on the earth is influenced by the following factors.
2. Variations in the Earth's orbital characteristics.
3. Atmospheric carbon dioxide variations.
4. Volcanic eruptions
5. Variations in solar output.

25. Mention the causes of Acid rain?

The gases SO 2 & NO2 in the atmosphere react with water to form acid.

SO2 + H2O H2SO4

NO2 + H2O HNO3

26. List out any four effects of climate change.

Mean sea level is increased on an average of around 1.8mm per year. Many ecosystems of the world have to adapt to the rapid change in global temperature.The rate of species extinction will be increased.

Human agriculture, forestry, water resources and health will be affected.

27. What are the effects of acid rain?

They corrodes houses, monuments, Statues & fences.

Deposition of acid partiles corrodes the metals.

28. Define Global warming.

Global warming is defined as the increase in temperature of the earth, which causes more changes in climate.

29. How can global warming be controlled?

i. Reduction in consumption of fossil fuel such as coal and petroleum.
ii. Use of biogas plants.
iii. Use of nuclear power plants.
iv. Increasing forest cover.
v. Use of unleaded petrol in automobiles.
vi. Installation of pollution controlling devices in automobiles and industries.

30. What are the two principal acids present in acid rain?

Sulphuric acid (H2SO4) and Nitric acid (HNO3).

UNIT IV - SOCIAL ISSUES AND THE ENVIRONMENT

01. Give a brief account of global warming. [Nov‟2009/8M]
02. Bring out the various details of wasteland reclamation practices. [Nov‟2009/8M]
03. Write a short note on Waste shed management.[Nov‟2009/4M]
04. Discuss briefly on environment act 1986.[Nov‟2009/4M]

05. Write briefly on Bhopal disaster and Chernobyl disaster. .[Nov‟2009/8M]
06. What is Global warming? Explain the measures to prevent it.
Also explain the effects of global warming.[May‟2010/16M]
07. Explain the effects of nuclear accidents with two case studies.[May‟2010/16M]
08. Explain the powers and functions of state pollution control board. [Nov‟2010/8M]
09. Explain the wild life protection act. [Nov‟2010/8M]
10. Explain the ozone and ozone layer depletion. [Nov‟2010/8M]
11. Discuss the energy requirement in detail for sustaining urban life. [Nov‟2010/8M]
12. Write short notes on Role of NGO, Acid rain, ozone layer depletion and water conservation.[May‟2011/16M]
13. Describe the functions of state board and central board according pollution control.[May‟2011/8M]
14. Explain in brief about the Indian Pollution regulations. [May‟2011/8M]
15. What do you mean by sustainable development? Explain the measures to attainsustainability. [Nov‟2011/8M]
16. Discuss the salient features of (1). Wild life (protection) Act (2). Forest (conservation) Act.[Nov‟2011/8M]
17. Discuss the objectives and various measures of wasteland reclamation anddevelopment. [Nov‟2011/16M]
18. Explain enforcement machinery involved in environmental legislation.

UNIT V –HUMAN POPULATIONAND ENVIRONMENT

1 .Define Birth Rate?

It is the number of live birth per 1000 people in a population in a given year.

2. Define Death Rate?

It is the number of deaths per 1000 people in a population in a given year.

3. Define Immigration?

It denotes the arrivals of individuals from neighboring population.

4. Define Emigration?

It denotes the dispersal of individuals from the original population to new areas.

5. Define population density?

Number of individuals of the population per unit area.

6. Define Population?

Group of individuals belonging to same species which live in a given are at a given time.

7. What is Population explosion?

Enormous increase in population due to low death and high birth rate.

8. What are causes of Population explosion?

Modern medicinal facilities, Increase of Life expectancy.

9. Define Infant mortality rate?

It is the percentage of infant died out of those born in one year.

10. Define total fertility rate?

It is the average number of children delivered by a woman in her life time.

11. What are the problems of population growth?

Environmental pollution, Unemployment problem and increasing demand for food.

12. What are the various methods of Family planning?

Traditional methods, Modern methods and Temporary methods.

13. What are Human rights?

They are the fundamental rights which are possess by all human beings irrespective of the caste, sex and language.

14. What are the different methods of imparting value education?

Telling, Modeling, Playing, Problem solving, Studying.

15 .What are the different types of Values?

Universal values, Cultural values, Individual values & spiritual values.

16. What is meant by HIV & AIDS?

HIV means Human Immunodeficiency Viruses.

AIDS means Acquired Immunodeficiency Syndrome caused by HIV viruses.

17. What are the factors which do not influence transmission of HIV?

Tears, Food, Cough, Handshake, Cloths & Utensils.

18 .What are the various modes of transmission of HIV?

Unsafe Sexual intercourse, Contaminated syringes and needles, Contaminated blood transfusion & from infected mother to baby.

19. Mention the ill effects of Aids?

Loss of Body weight, Fever & Diarrhea & More death rate.

20. What are the major precautions to avoid AIDS?

Safe sex, Using of Condoms, Public Education - AIDS awareness programmers, Monitoring of infected mothers, Monitoring of blood before transfusion.

21. ***How the population problem in India is analyzed?***

India's population problem may be viewed from three aspects

(1) The absolute size of population

(2) The rate of growth of the population

(3) The age structure of the population.

22. What is population explosion?

Population explosion means the rapid population growth which is unexpected and unimaginable.

23. Name some health related fitness components.

1. Muscular strength and endurance
2. Flexibility
3. Body composition

4 Cardio-vascular endurance

24. Define Demography.

It refers to the science of dealing with the study of size, composition and territorialdistribution of population; it includes study of natality, fertility, mortality, migration, andsocial mobility.

25. What is vital statistics?

Vital statistics are referred to systematically collected and compiled data relating tovital events of life such as birth, death, marriage, divorce, adoption, etc. Vital statistics are anindication of the given situation and help us in answering many health-related queries.

26. Name the fundamental rights of an Indian citizen.

1. Right to equality
2. Right to freedom of Speech and Activity
3. Right against Exploitation
4. Right to Freedom of Religion
5. Cultural and Educational Rights
6. Right to Constitutional Remedies.

27. What are zero growth curves?

It indicates the slow and steady growth in population.

28. What is opportunistic infection?

Infection with HIV can weaken the immune system to the point that it has difficultyfighting off certain infections. These types of infections are known as "opportunisticinfections" because they take the opportunity to weaken the immune system which causesillness of the body.

29. Name some tests available to find HIV infection.

In addition to the EIA or ELISA and Western blot, other tests now available include:

_ Radio ImmunePrecipitation Assay (RIPA)
_ Dot –blot immune binding assay
_ Immune fluorescence assay
_ Nucleic acid testing
_ Polymerase Chain Reaction (PCR)

30. List the special features of Comprehensive programme on women andchild welfare.

1. Personality2. Reduction of Deprivation3. Co-ordinational Effectively 4. Maternity and Motherhood

31. What are the reasons responsible for population explosion?

1. Invention of modern medical facilities reduces the death rate andincreases the birth rate
2. Increase of life expectancy
3. Illiteracy

32. Name some applications of IT in health.

_ Most of the ICU's (Intensive Care Units) are now using computers to monitorthe progress and condition of the patient, undergoing treatments.

_ Expert opinions from doctors away from the place can be sought with help ofIT tools like video conferencing etc.

_ can be used in the analysis and research on various potential medicines /drugsto be used in medical treatments.

33. List the applications of IT in environment.

a. Remote Sensing
b. Geographic Information System (GIS)
c. Global Positioning System (GPS)
d. Meteorology

34. Write about the value of education to the society.

1. Improve the integral growth of human being 2. Create attitude and improvement towards sustainable lifestyle 3. To understand about natural environment.

35. What are the major objectives of family welfare programme in India?

1. Reduce infant mortality rate to below 30/100 infants
2. Achieves 100% registration of birth, death and marriage
3. Encourage late marriage and later child birth
4. Constrain the spread of AIDS/HIV.

UNIT V- HUMAN POPULATION AND THE ENVIRONMENT

01. Describe briefly (i). The factors that affect human population growth rate (6). (ii).human Rights (5). (iii). Value education. (5) [Nov‟2009]
02. Discuss the factors influencing family size. [Nov‟2009/8M]
03. Write a note on the various methods of family planning. [Nov‟2009/4M]
04. What is AIDS? How to prevent it? [Nov‟2009/4M]
05. Explain in detail various health schemes initiated by Indian government. [May‟2010/8M]
06. Explain the role of Information Technology on Environment Protection and Human Health Protection. [May‟2010/16 M, Nov‟2010/10M, May‟2011/16M, Nov‟2011/16M]
07. Mention the causes of HIV transmission. [Nov‟2010/6M]
08. Discuss the necessity of formation of women self-help group. [Nov‟2010/6M]
09. Explain the need for value education. [Nov‟2010/6M]
10. Write about child welfare. [Nov‟2010/4M]
11. The world's population is 10000 years ago has been estimated at about 5 million. Whatexponential rate of growth would have resulted in the population in 1850? Which isestimated to have been 1 billion? Had that rate continued, what would be the populationin the year 2010? [May‟2011/16M]
12. How can age-structure pyramids serve as useful tool for predicting population growthtrends of a nation? Explain with examples. [Nov‟2011/12M]
13. What are the impacts of population explosion over the environment? [Nov‟2011/4M]
14. Explain about women and child welfare.

Reg. No. : | | | | | | | | | | | | |

Question Paper Code : 77165

B.E./B.Tech. DEGREE EXAMINATION, APRIL/MAY 2015.

Third Semester

Civil Engineering

GE 6351 — ENVIRONMENTAL SCIENCE AND ENGINEERING

(Common to Third Semester Computer Science and Engineering, Electrical and Electronics Engineering, Electronics and Instrumentation Engineering, Instrumentation and Control Engineering, Environmental Engineering, Robotics and Automation Engineering, Information Technology, Polymer Technology, Textile Chemistry, Textile Technology, Fashion Technology, Biotechnology, Plastic Technology, Pharmaceutical Technology and Petrochemical Technology)

(Also common to Fourth Semester Geoinformatics Engineering, Mechanical Engineering and Chemical Engineering)

(Regulation 2013)

Time : Three hours Maximum : 100 marks

Answer ALL questions.

PART A — (10 × 2 = 20 marks)

1. What are food chains?
2. Define biodiversity.
3. What do you mean by noise pollution?
4. What is acid rain?
5. What are renewable and non-renewable energy resources?
6. What is desertification?
7. What is consumerism?
8. What do you mean by disaster management?
9. Define population explosion.
10. List out the advantages of family welfare programmes.

PART B — (5 × 16 = 80 marks)

11. (a) (i) Describe the types, characteristic features, structure and functions of aquatic ecosystems. (8)

(ii) What are the major causes of man-wild conflicts? Discuss the remedial steps that can curb the conflict. (8)

Or

(b) (i) Explain the following :

(1) Ecological succession

(2) Ecological pyramid. (8)

(ii) Explain the major factors that are responsible for the loss of biodiversity. (8)

12. (a) (i) Explain the causes, effects and control measure of air pollution. (8)

(ii) Explain the control and prevention measures of municipal solid wastes. (8)

Or

(b) (i) Write briefly about the hazards caused by the nuclear wastes. (8)

(ii) Explain in detail the role of an individual in pollution prevention. (8)

13. (a) (i) What are the effects of deforestation? Is deforestation justified? Comment. (8)

(ii) Discuss the impact of mining on environment and human health. (8)

Or

(b) (i) Write note on :

(1) Food resources

(2) Mineral resources. (8)

(ii) With the help of a neat diagram explain the production of biogas. (8)

14. (a) (i) Explain the effects of nuclear accidents with two case studies. (8)

(ii) Discuss various measures for wasteland reclamation. (8)

Or

(b) (i) What is rain water harvesting? What are the purposes served by it? (8)

(ii) Name the laws that have been framed for environmental protection and mention the objectives for each act. (8)

15. (a) (i) What is AIDS? What are the sources and mode of transmission of HIV infection? (8)

(ii) What are the objectives and elements of value education? How can the same be achieved? (8)

Or

(b) (i) Write informative notes on :

(1) Human rights

(2) Women and child welfare. (8)

(ii) Describe the role of information technology in environment and human health with case studies. (8)

———————

Reg. No. : | | | | | | | | | | | | |

Question Paper Code : 27279

B.E./B.Tech. DEGREE EXAMINATION, NOVEMBER/DECEMBER 2015.

Third Semester

Civil Engineering

GE 6351 — ENVIRONMENTAL SCIENCE AND ENGINEERING

(Common to Third Semester Computer Science and Engineering, Electrical and Electronics Engineering, Electronics and Instrumentation Engineering, Instrumentation and Control Engineering, Environmental Engineering, Robotics and Automation Engineering, Information Technology, Polymer Technology, Textile Chemistry, Textile Technology, Fashion Technology, Biotechnology, Plastic Technology, Pharmaceutical Technology and Petrochemical Technology)

(Also common to Fourth Semester Geoinformatics Engineering, Mechanical Engineering and Chemical Engineering)

(Also common to Electronics and Communication Engineering, Mechatronics Engineering, Geoinformatics Engineering, Automobile Engineering, Aeronautical Engineering, Production Engineering, Medical Electronics Engineering, Petrochemical Engineering)

(Regulations 2013)

Time : Three hours Maximum : 100 marks

Answer ALL questions.

PART A — (10 × 2 = 20 marks)

1. Define biodiversity.

2. What is food chain?

3. Define noise pollution.

4. What is the role of individual in pollution prevention?

5. What are renewable and non-renewable energy resources?

6. What do you mean by land degradation?

7. List out the advantages of rain water harvesting.

8. Define consumerism.

9. State the role of information technology in Environment.

10. Define population explosion.

PART B — (5 × 16 = 80 marks)

11. (a) (i) Describe the types, characteristic features, structure and functions of

(1) Forest ecosystem

(2) Aquatic ecosystem. (8)

(ii) Explain the following :

(1) Ecological Succession

(2) Ecological Pyramids. (8)

Or

(b) (i) What are the major causes of man-wild conflicts? Discuss the remedial steps that can curb the conflict. (8)

(ii) Explain briefly the energy flow through ecosystem. (8)

12. (a) (i) Explain the causes, effects and control measure of water pollution. (8)

(ii) Explain the various methods of controlling air pollution. (8)

Or

(b) (i) Write a note on :

(1) Nuclear hazards

(2) Thermal pollution. (8)

(ii) What is marine pollution? Explain the ill effects of marine pollution with the help of a case study. (8)

13 (a) (i) Discuss the impact of mining on environment and human health. (8)

(ii) What are the effects of deforestation? Is deforestation justified? Comment. (8)

Or

(b) (i) Explain the merits and demerits of dam. (8)

(ii) Write informative notes on modern agriculture. (8)

14. (a) (i) Name the laws that have been framed for environmental protection and mention the objectives for each act. (8)

(ii) Discuss various measures for wasteland reclamation. (8)

Or

(b) (i) Write a note on :

(1) Earthquake

(2) Cyclone. (8)

(ii) Explain in detail, how biomedical wastes are managed and handled. (8)

15. (a) (i) What is AIDS? What are the sources and mode of transmission of HIV infection? (8)

(ii) Write a note on the following :

(1) Women and child welfare in India

(2) Human rights. (8)

Or

(b) (i) What are the objectives and elements of value education? How can the same be achieved? (8)

(ii) Population explosion affects the environment seriously. Discuss. (8)

Question Paper Code : 57420

B.E./B.Tech. DEGREE EXAMINATION, MAY/JUNE 2016

Third Semester

CIVIL ENGINEERING

GE 6351 – ENVIRONMENTAL SCIENCE AND ENGINEERING

(Common to Third Semester Computer Science and Engineering, Electrical and Electronics Engineering, Electronics and Instrumentation Engineering, Instrumentation and Control Engineering, Environmental Engineering, Robotics and Automation Engineering, Information Technology, Polymer Technology, Textile Chemistry, Textile Technology, Fashion Technology, Biotechnology, Plastic Technology, Pharmaceutical Technology and Petrochemical Technology)

(Also Common to Fourth Semester Geoinformatics Engineering and Mechanical Engineering, Chemical Engineering and Medical Electronics)

(Also Common to Agriculture Engineering Fifth Semester Electronics and Communication Engineering, Mechatronics Engineering, Mechanical and Automation Engineering, Automobile Engineering, Aeronautical Engineering, Production Engineering, Petroleum Engineering, Petrochemical Engineering)

(Also common to Sixth Semester Materials Science and Engineering)

(Also common to Sixth Semester Biomedical Engineering)

(Regulation 2013)

Time : Three Hours **Maximum : 100 Marks**

Answer ALL questions.

PART – A (10 × 2 = 20 Marks)

1. Give any two examples of physical hazard.

2. Mention two primary and secondary consumers in grassland ecosystem.

3. What is PAN ? Give its detrimental effect.

4. What are the causes of thermal pollution ?

5. Mention any two environmental effects of mining for mineral resources.

6. What are the reasons for land degradation ?

7. Explain the term sustainability briefly.

8. State any two biomedical waste handling rules.

9. Mention any two family welfare programs adopted in India.

10. What do you understand by population explosion ?

PART – B (5 × 16 = 80 Marks)

11. (a) (i) What is an ecosystem ? What are its components ? Explain the functions of each component with examples. **(8)**

(ii) Explain the factors that give threat to biodiversity. **(8)**

OR

(b) (i) How is biodiversity conserved in India ? **(4)**

(ii) Explain oxygen and nitrogen cycle briefly with diagrams. **(12)**

12. (a) (i) Write an elaborate notes on chemical and photochemical reactions in the atmosphere. **(10)**

(ii) What are the causes and effects of marine pollution ? **(6)**

OR

(b) (i) What are the methods adopted for the control of air pollutants ? Explain each briefly. **(8)**

(ii) How are water pollutants classified ? Give examples of each type. **(8)**

13. (a) (i) How is biogas produced ? What are its advantages ? **(8)**

(ii) What are the effects of modern agriculture ? **(8)**

OR

(b) (i) What are renewable and non-renewable energy resources ? Why are non-renewable energy resources preferred for energy utilization now-a-days ? What are advantages and disadvantages of harnessing non-renewable energy resources ? **(10)**

(ii) Explain bioconversion of pollutants with examples. **(6)**

14. (a) (i) Discuss the recent approaches to achieve sustainable development. **(12)**

(ii) What is green chemistry and what are its principles ? **(4)**

OR

(b) (i) Discuss the various applications of green chemistry for achieving sustainable development. **(8)**

(ii) Explain salient features of Water Act. **(8)**

15. (a) (i) What are sparsely populated areas ? Give examples and reasons for poor population in those areas. **(8)**

(ii) What is HIV ? How is it caused ? What are the preventive measures suggested ? **(8)**

OR

(b) (i) Explain a note on EIA. **(8)**

(ii) Discuss women and child welfare programs practiced in India. What are the hurdles encountered ? **(8)**

———————

Reg. No. : [ ][ ][ ][ ][ ][ ][ ][ ][ ][ ][ ][ ]

Question Paper Code : 80507

B.E./B.Tech. DEGREE EXAMINATION, NOVEMBER/DECEMBER 2016.

Third Semester

Civil Engineering

GE 6351 — ENVIRONMENTAL SCIENCE AND ENGINEERING

(Common to Third Semester Computer Science and Engineering, Electrical and Electronics Engineering, Electronics and Instrumentation Engineering, Instrumentation and Control Engineering, Environmental Engineering, Robotics and Automation Engineering, Information Technology, Polymer Technology, Textile Chemistry, Textile Technology, Fashion Technology, Biotechnology, Plastic Technology, Pharmaceutical Technology and Petrochemical Technology)

(Also common to Fourth Semester Agriculture Engineering, Geoinformatics Engineering, Mechanical Engineering and Chemical Engineering and Medical Electronics)

(Also common to Fifth Semester Electronics and Communication Engineering, Mechatronics Engineering, Automobile Engineering, Aeronautical Engineering, Production Engineering, Mechanical and Automation Engineering, Petrochemical Engineering, Petroleum Engineering)

(Common to Sixth Semester Biomedical Engineering and Materials Science and Engineering)

(Regulations 2013)

Time : Three hours. Maximum : 100 marks

Answer ALL questions.

PART A — (10 × 2 = 20 marks)

1. Define ecosystem diversity.
2. Write about any two chemical hazards present in the environment.
3. Mention the measures to control thermal pollution caused by industries.
4. List any four water quality parameters and their importance.
5. What is Biogas? Mention its uses.
6. Define Sustainable lifestyle.
7. Write any four principles of green chemistry.

8. What is consumerism? How does it affect the environment?

9. Define EIA and its benefits.

10. What are the objectives of Women Welfare systems?

PART B — (5 × 13 = 65 marks)

11. (a) (i) Describe the function of an ecosystem using energy flow and material cycling. (7)

(ii) Define In-situ and Ex-situ conservation of biodiversity and explain. (6)

Or

(b) (i) Explain the stages in ecological succession using appropriate terminology. (7)

(ii) Justify India to be a mega biodiversity nation with the required data. (6)

12. (a) (i) Discuss about the causes, impacts and control measures of ozone depletion in the atmosphere. (7)

(ii) Write a flow sheet and explain the steps involved in Solid Waste Management. (6)

Or

(b) (i) Mention any four air pollutants with their sources and emission control measures. (7)

(ii) What are the effects of Marine pollution? (6)

13. (a) (i) Explain the stages in desertification. (7)

(ii) What is over utilisation of water resources? Mention the remedial measures. (6)

Or

(b) (i) Write a note on (1) use of fertilizers and pesticides (2) soil salinity problems. (7)

(ii) List the impact of deforestation on the environment. (6)

14. (a) (i) What is cyclone? Describe cyclone management using fore casting. (7)

(ii) What is Ecomark? Explain. (6)

Or

(b) (i) Describe about The Air Act 1981. (7)

(ii) Name any three significant biomedical wastes and their safe disposal. (6)

15. (a) (i) What is value education? Mention its importance. (7)

(ii) Explain the role of GIS in environmental management. (6)

Or

(b) (i) What is population explosion? Give the reasons behind it. (7)

(ii) Discuss the factors influencing human health under current environmental conditions. (6)

PART C — (1 × 15 = 15 marks)

16. (a) (i) Explain about any two methods of biodegradation of pollutants. (8)

(ii) Mention a case study on :

(1) Man and wild life conflict

(2) Productive use of biodiversity. (7)

Or

(b) (i) Illustrate any two methods of harnessing alternative sources of energy. (8)

(ii) Describe in detail about any one pollution related case study. (7)

Reg. No. : [ ][ ][ ][ ][ ][ ][ ][ ][ ][ ][ ][ ]

Question Paper Code : 71947

B.E./B.Tech. DEGREE EXAMINATION, APRIL/MAY 2017.

Third/Fourth/Fifth/Sixth/Seventh/Eighth Semester

Mechanical Engineering

GE 6351 – ENVIRONMENTAL SCIENCE AND ENGINEERING

(Common to Aeronautical Engineering, Agriculture Engineering, Automobile Engineering, Biomedical Engineering, Civil Engineering, Computer Science and Engineering, Electrical and Electronics Engineering, Electronics and Communication Engineering, Electronics and Instrumentation Engineering, Environmental Engineering, Geoinformatics Engineering, Industrial Engineering, Industrial Engineering and Management, Instrumentation and Control Engineering, Manufacturing Engineering, Marine Engineering, Materials Science and Engineering, Mechanical and Automation Engineering, Mechatronics Engineering, Medical Electronics Engineering, Petrochemical Engineering, Production Engineering, Robotics and Automation Engineering, Bio technology, Chemical Engineering, Chemical and Electrochemical Engineering, Fashion Technology, Food Technology, Handloom and Textile Technology, Information Technology, Petrochemical Technology, Petroleum Engineering, Pharmaceutical Technology, Plastic Technology, Polymer Technology, Textile Chemistry, Textile Technology)

(Regulations 2013)

Time : Three hours Maximum : 100 marks

Answer ALL questions.

PART A — (10 × 2 = 20 marks)

1. What do you understand by 'species biodiversity'? Give one example.

2. How is nitrogen fixed in soil?

3. What are the characteristics of PAN?

4. Mention the effects of nuclear wastes in humans.

5. Give any two reasons for marine pollution.

6. Write any two problems caused by high saline soils.

7. How is cyclone formed?

8. When does rehabilitation arise? Mention any one problem to government during rehabilitation.

9. What is meant by value education?

10. Mention any two welfare programs for children adopted in India.

PART B — (5 × 13 = 65 marks)

11. (a) (i) Explain the structure and function of grassland eco system. (6)

(ii) Substantiate the statement, 'India is a megadiversity nation'. (7)

Or

(b) (i) Write the importance of biological hazard in the environment. (6)

(ii) Explain the methods of conservation of biodiversity. (7)

12. (a) (i) How is noise pollution controlled? (6)

(ii) Write a detailed note on photo chemical reactions taking place in the atmosphere. (7)

Or

(b) (i) What are the effects of heavy metals in aquatic environment. (6)

(ii) What is a particulate matter? How is it controlled by using equipment? (7)

13. (a) (i) What are the reasons of deforestation? (6)

(ii) How is biogas generated? (7)

Or

(b) Explain in detail the effect of modern agriculture which includes both beneficial and adverse effects. (13)

14. (a) What is green chemistry? Explain the various principles of green chemistry with suitable examples. (13)

Or

(b) Explain the features of the following :

(i) Air Act

(ii) Forest conservation Act. (13)

15. (a) Describe the following : (13)

(i) Environment and human health relation.

(ii) HIV and AIDS.

Or

(b) What do you mean by environmental impact analysis? What are the methods followed for EIA? (13)

PART C — (1 × 15 = 15 marks)

16. (a) Enlist the rules of management and handling biomedical waste and analyse critically the problems associated with the implementation.

Or

(b) Analyse the environmental effects of extracting and using mineral resources and write the remedies taken.

EC6504 MICROPROCESSOR AND MICROCONTROLLER L T P C
3 0 0 3

UNITI THE 8086 MICROPROCESSOR 9

Introduction to 8086–Microprocessorarchitecture–Addressingmodes-Instructionsetand assembler directives–Assemblylanguageprogramming–ModularProgramming-LinkingandRelocation-Stacks-Procedures–Macros–Interrupts and interrupt service routines– Byte and String Manipulation.

UNITII 8086 SYSTEMBUS STRUCTURE 9

8086 signals – Basic configurations – System bus timing –System design using 8086– IO programming–Introduction to Multi programming–System Bus Structure-Multiprocessor configurations– Coprocessor, Closely coupled and loosely Coupled configurations– Introduction to advanced processors.

UNITIII I/O INTERFACING 9

MemoryInterfacingandI/Ointerfacing-Parallelcommunicationinterface–Serialcommunicationinterface–D/AandA/DInterface-Timer–Keyboard/displaycontroller–Interruptcontroller–DMA controller–Programming and applications Case studies: Traffic Light control , LED display ,LCD display, Keyboard display interface and Alarm Controller.

UNITIV MICROCONTROLLER 9

Architecture of 8051–Special Function Registers(SFRs)-I/O Pins Port sand Circuits- Instruction set -Addressing modes-Assembly language programming.

UNITV INTERFACING MICROCONTROLLER 9

Programming8051 Timers-SerialPortProgramming-InterruptsProgramming–LCD&KeyboardInterfacing-ADC,DAC&SensorInterfacing-ExternalMemory Interface-Stepper Moto rand Waveform generation.

TOTAL:45 PERIOD

TEXTBOOKS:

1. Yu-Cheng Liu, Glenn A.Gibson, “Microcomputer Systems: The 8086 / 8088 Family - Architecture, Programmingand Design”,SecondEdition,Prentice Hall ofIndia,2007.
2. MohamedAliMazidi,JaniceGillispieMazidi,RolinMcKinlay,“The8051Microcontrollerand EmbeddedSystems:UsingAssemblyandC”,SecondEdition,Pearsoneducation,2011.

REFERENCE:

1. DoughlasV.Hall,“MicroprocessorsandInterfacing,ProgrammingandHardware”,TMH,2012

UNIT –I 8086 MICROPROCESSOR

1. What is the use of MN/MX signals in 8086?

It is used to operate the microprocessor in two operating modes i.e. maximum and minimum mode. The minimum mode is used for small systems with a single processor and maximum mode is for medium size to large systems, which include two or more processors

2. How many data lines and address lines are available in 8086?

Address lines= 20 bit address
bus Data lines= 16 bit data bus

3. What is the use of Instruction Queue in 8086 microprocessor?

The queue operates on the principle of first in first out(FIFO). So that the execution unit gets the instruction for execution in the order they fetched .Feature of fetching the next instruction while the current instruction is executing is called pipelining which will reduce the execution time.

4. What is pipelining? [May 2007]

In 8086, to speed up the execution of program, the instructions fetching and execution of instructions are overlapped each other. This technique is known as pipelining

5. Write the size of physical memory and virtual memory of 8086 microprocessor.

Physical addresses are formed when the left shifted segment base address is added to the offset address. The combination of segment register base addresses and offset address is the logical address in memory.

Size of physical memory=2^{20}=1MB
Size of virtual memory=2^{16}=64 KB

6. How the physical address for fetching the next instruction to be executed, is obtained in 8086?[Dec 2013]

The physical address is obtained by appending four zeros to the content present in CS register and then adding the
Content of IP register with the above value.
For example, assuming the content of
CS = 1200 H
IP = 0345 H
CS= 0001 0010 0000 0000 0000
0000 0011 0100 0101

0001 0010 0011 0100 0101 – Physical address=12345 H

7. If the execution unit generates effective address of 43A2 H and the DS register contains 4000 H. What will be the physical address generated by the BIU? What is the Maximum Size of the data segment?

Effective address = 43A2 H
Physical address = 40000H

443A2 H
Maximum size of DS = 2^{16} = 64 KB

8. What are the difference between 8085 and 8086?

S.No	8085	8086
1.	8 bit microprocessor	16 bit microprocessor
2.	2^{16} memory locations	2^{10} memory locations
3.	Sequential facility	Pipelined architecture available
4.	Low speed	High speed

9. What is operation carried out when 8086 executes the instruction MOV SB?

MOVSB
Move String Byte
[[DI]] [SI]]
Move 8 bit data from memory location addressed by SI segment in DS location to addressed by DI in segment ES.
If DF (Direction Flag) = 0, SI is incremented
by 1. = 1, SI is
decremented by 1

10. What are recursive procedures?

A recursive procedure is a procedure, which calls itself. Recursive procedures are used to work with complex data structures called trees. If the procedure is called with N=3, then the N is decremented by 1 after each procedure CALL and the procedure is called until N=0.

11. What are Macros?

Macro is a group of instruction. The macro assembler generates the code in the program each time where the macro is called. Macros are defined by MACRO & ENDM directives.

Creating macro is similar to creating new opcodes that can be used in the program

```
INIT MACRO
MOV AX, data
MOV DS
MOV ES, AX
ENDM
```

12. What is interrupt service routine? [May 2009]

Interrupt means to break the sequence of operation. While the CPU is executing a Program an interrupt breaks the normal sequence of execution of instructions & diverts its execution to some other program. This program to which the control is transferred is called the interrupt service routine.

13. Compare Procedure & Macro. [Dec 2010, May 2011]

Accessed by CALL & RET instruction Accessed during assembly with name given during program execution to macro when defined Machine code for instruction is put only once in the memory Machine code is generated for instruction each time when macro is called With Procedures less memory is required With macro more memory is required Parameters can be passed in registers, memory locations or stack Parameters passed as part of statement which calls macro.

14. List the various addressing modes present in 8086. [Apr/May 2015]

There are 12 addressing modes present in 8086. They are,
Register addressing mode, Immediate addressing mode
Direct addressing modes, Register indirect addressing modes
Based addressing modes, Indexed addressing modes
Based Indexed addressing modes, String addressing modes
Direct addressing mode, Indirect addressing mode
Relative addressing mode, Implied addressing mode

15. Name any four flags of 8086. [May 2009] [NOV/DEC 2016]

Auxiliary carry flag (AF), Carry flag (CF), Direction flag (DF), Interrupt flag(IF), Overflow flag(OF), Parity flag)PF), Sign flag (SF), Trap flag (TF), Zero flag(ZF).

16. List the advantages of using segment registers in 8086.[May 2008]

1. It allows the memory addressing capacity to be 1MB even though the address associated with individual instruction is only 16-bit.
2. It facilitates use of separate memory areas for program, data and stack.
3. It allows the program to be relocated which is very useful in multiprogramming

17. What are assembler directives? Give an example?[May 2011, May 2013]

There are some instructions in the assembly language program which are not a part of processor interrupt set. These are reffered to as pseudo operation or as assembler directives. Eg. DB, DW, ASSUME.

18. What is assembler?

The assembler translates the assembly language program text which is given as input to the assembler to their binary equivalents known as object code. The time required to translate the assembly code to object code is called access time. The assembler checks for syntax errors & displays them before giving the object code

19. Define BIOS.

The IBM PC has in its ROM a collection of routines, each of which performs some specific function such as reading a character from keyboard, writing character to CRT. This collection of routines is referred to as Basic Input Output System or BIOS

20. Write an 8086 assembly language program to multiply two 16 bit numbers.

```
MOV AX, [2000]
MUL [2002]
MOV [2100], DX
MOV [2102], AX
HLT
```

21. Write about the different types of interrupts supported in 8086?[Apr/May 2015]

- Divide by zero interrupt
- Single step interrupt
- Non maskable interrupt
- Break point interrupt
- Overflow interrupt
- Software interrupt (Type 0 to Type 255)
- Maskable interrupt.

22. List the segment registers of 8086?[NOV/DEC 2016]

There are four segment registers, CS, SS, DS, and ES, standing for CodeSegment, Stack Segment, Data Segment, and Extra Segment. Each is 16 bits in size, and is selected either in context of the particular operation or by use of a segmentoverride prefix instruction.

PART-B QUESTIONS

16. (i) Explain the internal hardware architecture of 8086 microprocessor with neat diagram?
    (ii) Write short note about assembler directives?
17. Explain the various addressing modes of 8086 microprocessor with examples?
18. (i) Explain Data transfer, arithmetic and branch instructions ?
    (ii)Write an 8086 ALP to find the sum of numbers in the array of 10 elements?
4. Explain modular programming in detail?
5. Write a note about stack, procedures and macros?
6. Define interrupt and their two classes? Write in detail about interrupt service routine?
7. Explain byte and string manipulation with examples?
8. Write in detail about instruction formats and instruction execution timing?
9. Write an ALP to find the largest number and smallest number in the array?
10. Write a short note about
    (i)Loop, NOP and HLT instructions
    (ii) Flag manipulation, logical and shift& rotate instructions?

UNIT-II 8086 SYSTEM BUS ARCHITECTURE

1. What are the differences between Memory mapped I/O and I/O mapped I/O in 8086?

S.No	Memory mapped I/O	I/O mapped I/O
1.	It is related as a memory location	It is not related as a memory location
2.	Microprocessor can access I/O devices By memory instruction like MOV AX, [BX], No special instructions are needed	It require special instruction to access I/O devices like IN ,OUT
3.	8086 can access **1**M Byte memory locations or I/O ports	8086 can access 64 K Byte memory locations
4.	It requires 20 address lines	It requires 16 address lines
5.	MEMR, MEMW can be used to I/O devices	IOR, IOW signals are used
6.	It is suitable for small system	It is suitable for large system

2. What are the schemes for establishing priority in order to resolve bus arbitration problem?

There are three basic bus access control and arbitration schemes

1. Daisy Chaining
2. Independent Request
3. Polling

3. What is the function of the BHE signal in 8086?

BHE signal means Bus High Enable signal. The BHE signal is made low when there is Some read or write operation is carried out. ie .Whenever the data bus of the system is busy i.e. whenever there is some data transfer then the BHE signal is made low.

4. What is multiprogramming?

If more than one process is carried out at the same time, then it is known as Multiprogramming. Another definition is the interleaving of CPU and I/O operations among Several programs is called multiprogramming.

5. Differentiate between absolute and linear select decoding.

S.No	Absolute decoding	Linear decoding
1	All higher address lines are defined to select the memory or I/O device.	Few higher address lines are decoded to select the memory or I/O device
2	More h/w is required to design decoding logic	Hardware required to design decoding logic is less
3	Higher cost for decoding circuit	Less cost for decoding circuit

4	No multiple address	Has a disadvantage of multiple addressing
5	Used in large systems	Used in small systems

6. How do 8086 interrupts occur?

An 8086 interrupt can come from any of the following three sources

• External signals
• Special instructions in the program
• Condition produced by instruction

7. Explain the BHE and LOCK signals of 8085

BHE- Bus high signal is used to indicate the transfer of data over the higher order (D15-D8)bus

LOCk-Lock the bus from DMA or other master

8. What do you mean by numeric processor?

8087 is the numeric processor or co-processor. It adds arithmetic, exponential and logarithmic instruction to 8086/8088 set for all data types.

9. What are the advantages of loosely coupled configuration in a multiprocessor

- Each processor may have a local bus to access local memory or I/O devices.
- More flexible
- Better system throughput by having more than one processor
- If any fault occurs in module, that fault module can be detected and replaced. So the breakdown of the entire system is avoidable.

10. What is the function of TF, DF ,IF in 8086?

TF: It is used for single stepping through a program. In the mode, the 8086 generates an internal interrupt after execution of each instruction.

DF: It is used to set direction in string operation.

IF: It is used to receive external maskable interrupts through INTR pin. Clearing IF, disable these interrupts

11. What are the two modes of operations present in 8086?

i. Minimum mode (or) Uniprocessor system
ii. Maximum mode (or) Multiprocessor system

12. What is multiprogramming?

If more than one process is carried out at the same time, then it is known as Multiprogramming. Another definition is the interleaving of CPU and I/O operations among several programs is called multiprogramming.

13.State the functional units available in 8086?

BIU- Bus Interface Unit
EU- Execution Unit

14. What are the functional parts of control unit in 8087?

Control word register
Status word register
Data buffer
Shared operand queue

15. Name the data type of 8087?

Binary register-16bits, 32 bits, 64 bits
Packed decimal number-80 bits
Floating point/Real number-32bits, 64 bits, 80 bits

16. What is the need of BUSY bit in status word of 8087?

It gives the information about numerical execution unit (NEU)
If B_{15}=1, the NEU is busy with execution
0, NEU is free

17. Mention the feature of 8087.

- 8087 is a high performance data co-processor
- It supports 16, 32,64bit register, 32,64,80 bits floating point and 16 digit BCD data types.
- It has multi –bus system compatible interface
- It is designed to specially work with 8086 and 8088 processor
- It adds arithmetic, trigonometric, exponential and logarithmic instruction to 8086/8088

18. What is the maximum memory size that can be addressed by 8086?

In 8086, an memory location is addressed by 20 bit address and the address bus is 20 bit address and the address bus is 20 bits. So it can address up to one mega byte (2^20) of memory space.

19. What are the functions of bus interface unit (BIU) in 8086?

(a) Fetch instructions from memory.
(b) Fetch data from memory and I/O ports.
(c) Write data to memory and I/O ports.
(d) To communicate with outside world.
(e) Provide external bus operations and bus control signals.

20. What are the different types of methods used for data transmission? [May/June 2015]

The data transmission between two points involves unidirectional or bi-directional Transmission of meaningful digital data through a medium. There are basically there modes of Data transmission

(a) Simplex
(b) Duplex
(c) Half Duplex

21. Define bus. Why bus request and cycle stealing are required? [Nov/Dec 2014] [Nov/Dec 2016]

- Microprocessor needs to communicate with Input devices to get data,it needs to communicate with memory to process data according to instructions written in memory and finally it needs to communicate with output devices to display the output on O/P devices. To communicate with external world, Microprocessor make use of buses. There are different types of buses used in Microprocessor:
- DMA transfers can either occur one byte at a time or all at once in burst mode. If they occur a byte at a time, this can allow the CPU to access memory on alternate bus cycles – this is called cycle stealing

22. What are the advantages of a loosely coupled configuration in a multiprocessor system

- Better throughput
- Expanded in modular form
- Failure of one module does not affect other module

23. Explain the function of BHE and ALE

Address Latch Enable:

When high, multiplexed address/data buscontains address information

Bus High Enable/S7

Enables most significant data bits

24. Draw the read cycle timing diagram for minimum mode configuration. [Nov/Dec 2014]

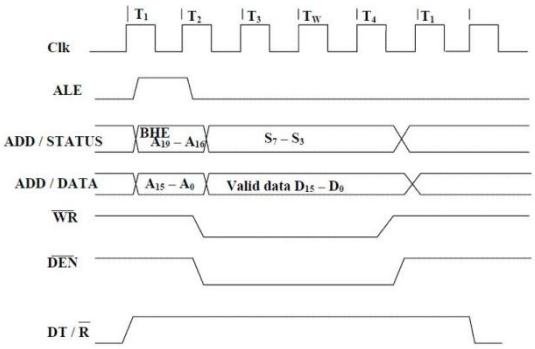

Write Cycle Timing Diagram for Minimum Mode

25. What is the need for multiprocessor configuration?

- Limited data width
- DMA processor can help CPU

26. What is the purpose of CLK signal in an 8086 system.

To provide timing information, To synchronize device

27. Schematically show the synchronization is made between 8086 and its co-processor.

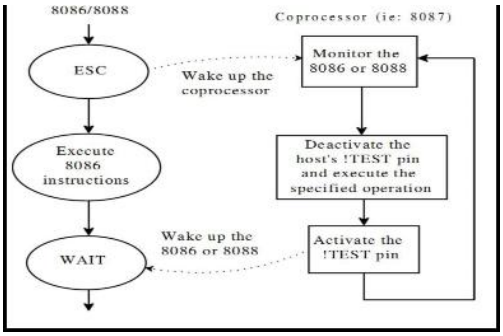

28. **Draw the read cycle timing diagram for minimum mode**?

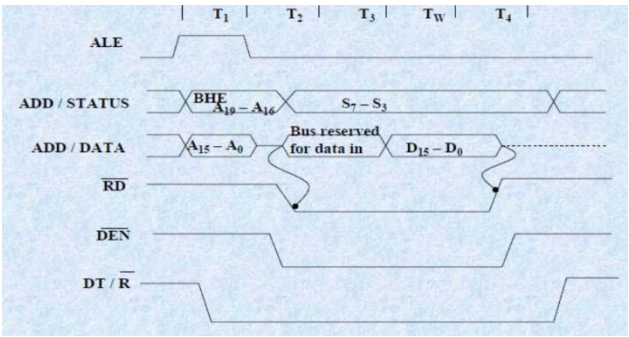

29. Define machine cycle? [Nov/Dec 2016]

A machine cycle, also called a processor cycle or a instruction cycle, is the basic operation performed by a central processing unit (CPU). A CPU is the main logic unit of a computer.

Part-B

1. Explain Minimum mode and maximum mode of operation in 8086 in detail.
2. Explain in detail about the system bus timing of 8086/8088.
3. Write notes on the following
   - (i) Programmed I/O
   - (ii) Interrupt I/O
4. Explain in detail about block transfers and DMA.
5. Explain in detail about closely coupled configurations.

6. Explain loosely coupled configurations in detail.
7. Explain the following in detail
   (i) Process Management &iRMX86
   (ii) Memory Management
   (iii) Virtual Memory
8. Explain Numeric data Processor in detail.
9. Explain in detail about I/O Processor.
10. Explain the following
    (i) Multiprocessor system(4)
    (ii) Coprocessor(4)
    (iii) Multiprogramming(4)
    (iv) Semaphore(4)

UNIT-III I/O INTERFACING

1. What are the basic modes of operation of 8255? [May 2011]

There are two basic modes of operation of 8255, viz.
1. I/O mode.
2. BSR mode.

In I/O mode, the 8255 ports work as programmable I/O ports, while In BSR mode only port C (PC0-PC7) can be used to set or reset its individual port bits.

2. What is meant by DMA data transfer? [Nov/Dec 2016]

DMA stands for direct memory Access. In order to transfer bulk amount of data between memory and I/O device without the involvement of CPU.

3. What is key bouncing? [June 2006]

Key bouncing is the mechanical vibratory action of the contact making and breaking. When keys are pressed in keyboard. Key bounce can be confused as the rapid pressing a key.

4. Name the modes of DMA operation.

Slave mode operation
Master mode operation

5. List the use of USART.

USART provide serial communication
Used in GPS navigation system
Mobile application
Industrial and control application

6. What is the count value needed to program the 8254 to generate a delay of 0.5 ms?

Clock frequency of 8254= 2.6 MHZ

Time required for 1 T sate = 1/ $2.6X10^{6}$=0.385 µsec
Number of T states required for 0.5 ms= $0.5X10^{-3}$/ $0.385X10^{-6}$= 1300

7. What is an USART?

USART stands for universal synchronous/Asynchronous Receiver/Transmitter. It is a programmable communication interface that can communicate by using either synchronous or asynchronous serial data.

8. Define HRQ.

The hold request output requests the access of the system bus. In non- cascaded 8257 Systems, this is connected with HOLD pin of CPU. In cascade mode, this pin of a slave is Connected with a DRQ input line of the master 8257, while that of the master is connected with
HOLD input of the CPU

9. State the status word format for 8254.

OUT
NULL
COUNT
RW1 RW0 M2 M1 M0 BCD

10. Define Baud rate?[Dec 2012]

The rate at which the bits are transmitted is called Baud rate. The standard baud rates are 75, 110,150, 300, 600, 1100, 2400.

11. What is the purpose for the 8255 PPI?[May 2009]

The 8255A is a widely used, programmable, parallel I/O device. It can be programmed to transfer data under various conditions, from simple I/O to interrupt I/O.

12. What is the use of stepper motor?

A stepper motor is a device used to obtain an accurate position control of rotating shafts. A stepper motor employs rotation of its shaft in terms of steps, rather than continuous rotation as in case of AC or DC motor.

13. What are TXD and RXD?

TXD- Transmitter Data Output is a output pin carries serial stream of the transmitted data
bits along with other information like start bit, stop bits and priority bit

RXD- Receive Data Input This input pin of 8251A receives a composite stream of the data to be received by 8251A.

14. List the major components of the keyboard/Display interface.

a. Keyboard section
b. Scan section
c. Display section

d. CPU interface section

15. What is interfacing?

An interface is a shared boundary between the devices which involves sharing Information. Interfacing is the process of making two different systems communicates with each other.

16. What is need for D/A converter?

The microprocessor can produce only digital signals. Analog signals are needed for controlling certain analog devices in many applications. The digital –to analog converters used to convert digital signal into analog signal

17. What are the primary features of 8259?

It manages 8 interrupt requests (IR_0 to IR_7)

8259 can solve eight level of interrupt priority in many models

It is designed to operate only with 8bit processor, 8259A is designed to operate 8 bit as well as 16 bit processors.

18. What is stack pointer and write the stack level of 8051

The b-bit stack pointer register is used by 8051 to hold on internal RAM address that is called the top of the stack. The address held in last byte of the data was stored by stack operation. SP is set to 07H when 8051 is reset and can be changed by any internal RAM address by the programmer.

19. What are the control signals are used in A/D converter?

Control signals used in A/D converter

$\overline{RD}$, $\overline{WR}$, $\overline{CS}$, $\overline{INTR}$

20.What is the use of DAA instruction in 8051?

DAA –Decimal adjust accumulator after addition

This instruction is used after addition of BCD numbers to convert the result back to BCD. It adds 6 to the lower 4 bits of A if it is greater than 9 or AC =1. It also adds 6 to the upper 4 bits of A if it is greater than 9 or if Cy =1.

21. Give the various modes and applications of 8254 timer?

- Mode 0: An events counter enabled with G.
- Mode 2: Counter generates a series of pulses 1 clock pulse wide
- Mode 1: One-shot mode.
- Mode 3: Generates a continuous square-wave with G set to 1
- Mode 5: Hardware triggered one-shot. G controls similar to Mode 1.

22. Define half duplex and full duplex.

In a half-duplex system, there are still two clearly defined paths/channels, and each party can communicate with the other but not simultaneously; the communication is one direction at a time. In a full duplex system, both parties can communicate with each other simultaneously.

23. Draw the block diagram of alarm controller with 8086 as processor?

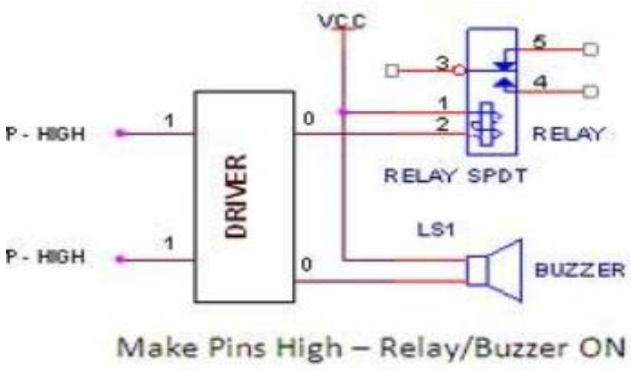

24. What is the drawback of memory mapped I/O ?[Nov/Dec 2016]

- The data transfer only occurs between the I/O port and the AL, AX registers.
- Memory mapped I/O is mapped into the same address space as program memory and/or user memory, and is accessed in the same way.

25. What frequency transmit clock (TxC) is required by an 8251 in order for it to transmit data at 4800 baud with a baud rate factor of 16?

Frequency =4800/16=30GHz

Part-B

1. Draw and explain the block diagram of 8254 programmable interval timer. Also explain the various modes of operation.
2. Explain 8279 keyboard /display controller with neat block diagram.
3. (i)Explain how to interface: (i) ADC and (ii) DAC
   (ii) Compare serial and parallel interface?
4. With neat block diagram explain the 8251 and its operating modes.
5. Draw the block diagram of I/O interface &explain in detail.
6. Explain in detail about DMA controller.
7. Explain the format of I/O mode set control and BSR control word of programmable peripheral interface. Explain in detail the operating modes of PPI?
8. Draw and explain the block diagram of traffic light control system.
9. Write short notes on LED display, LCD display,Keyboard display interface.
10. Draw and explain the block diagram of alarm controller.

UNIT – IV MICROCONTROLLER

1. What is Microcontroller?

Microcontroller incorporates all the features that are found in microprocessor with the added features of in-built ROM, RAM, Parallel I/O, Serial I/O, counters and clock circuit to make a micro computer system on its own.

2. What is the advantage of microcontroller over microprocessor?

- The overall system cost is low , as the peripherals are integrated in a single chip.
- The size is very small
- The system is easy to troubleshoot and maintain.
- If required additional RAM , ROM and I/O ports may be interfaced.
- The system is more reliable.

3. What is the function of IP register in 8051? [May 2010]

The IP register is used to set high priority to one or more interrupt in 8051

-	-	-	PS	PT1	PX1	PT0	PX0

Setting a bit to 1 makes the corresponding interrupt to have high priority and setting a bit to 0 makes the corresponding interrupt to have low priority.

4. What is the importance of special function registers(SPF) in 8051?

The 8051 operations that do not use the internal 128 byte RAM address from 00 H to 7F H are done by a group of special internal registers called SPFs(Special Function Registers) Which have address between 80 H and FF H.

5.Define baud rate.[may 2009]

Baud rate is used to indicate the rate at which data is being transferred . Baud rate = 1/Time for a bit cell.

6.What is the function of DPTR register?

The data pointer register (DPTR) is the 16 bit address register that can be used to fetch any 8 bit data from the data memory space. When it is not being used for this purpose, it can be used as two eight bit registers , DPH and DPL.

7.What is the job of the TMOD register?

TMOD (timer mode) register is used to set the various timer operation modes . TMOD is dedicated to the two timers (Timer0 and Timer1) and can be considered to be two duplicate 4 bit registers, each of which controls the action of one of the timers

8. What are the difference between a microprocessor and microcontroller?[May 2014]

S.NO	MICROPROCESSOR	MICROCONTROLLER
1.	It has one or two types of bit handling Instructions	It has many bit handling instructions.
2.	No SFRs are available.	SFRs are available.
3.	ROM ,RAM ,Parallel I/O , Serial I/O ,	ROM ,RAM ,Parallel I/O , Serial I/O , Counters

	Counters and a clock circuit are not available.	and a clock circuit are available.
4.	Microprocessor based system requires more	Microprocessor based system requires less
	hardware.	hardware.
5.	Microprocessor based system is more flexible for design.	Microprocessor based system is comparatively less flexible for design.

9. What are the register banks in 8051 microcontroller?

34 general purpose or working registers in which A and B hold results of math and logical operations. The other 32 are arranged as part of the internal RAM in 4 banks : bank 0 , bank 1, bank 2 and bank 3, each of eight registers.

10. How does the status of EA pin affect the access to internal and external program memory? [Nov/Dec2016]

EA- Enable Interrupt bit. Cleared to 0 by program to disable all interrupts , set to 1 to permit individual interrupts to be enabled by their enabled bits . It is set to access data from external memory or else it is grounded for internal memory operations

11. What is the difference between timer and counter operation in 8051?

The timer counts the internal clock pulses whose frequency is $1/12^{th}$ of oscillator frequency . The counter counts the internal clock pulses which are given through T0 pin (for counter 0) and T1 pin (for counter 1) of 8051.

12. Explain the instruction: SWAP

SWAP instruction works only on the accumulator (SWAP A) . It swaps the lower nibble and higher nibble .The lower 4 bits are put into the higher 4 bits and the higher 4 bits are put into the lower 4 bits.

E.g.- SWAP A

	ACC	
Before execution:	1111 0000	
After execution:	0000 1111	

13. What is key debouncing?

When a key press is found, the microcontroller waits for at least 10ms before it accepts the key as input. It is called as key debouncing.

14. List the applications of microcontroller.

Motor speed control
Industrial control
Peripheral devices
Automobile applications
Home applications

15. Mention the various addressing modes of 8051.

Immediate addressing mode
Register addressing mode
Direct addressing mode
Register indirect addressing mode
Indexed addressing mode

16. What is nested interrupts?

The 8051 is executing an ISR for servicing an interrupt and another interrupt occurs. If the new coming interrupt is high priority then only it can interrupt the previously occurred low priority interrupt. These are called nested interrupts.

17. What are the contents of the accumulator after the execution of the following program segments?

MOV A, #3CH
MOV R4, #66H
ANL A, R4
A 3C
R4 66
A 24

18. Write a program to load accumulator A, DPH and DPL with 30H.

MOV A, #30
MOV DPH, A
MOV DPL, A

19. **Mention the various instruction set of 8051.**

Data transfer group
Arithmetic group
Logical group
Boolean manipulation
Program branching

20. Write in detail about the RET instruction of 8051.

This instruction is used to return from a subroutine entered by CALL instructions. The two bytes of stack are popped into PC and program execution continues at new address. After Popping the stack pointer is decremented by two.

21. What is the jump range?[Nov 2013]

The short jump allows jumps to memory location with +127 and -127 bytes from the memory location .Long jumps anywhere in 64K bytes of memory.

22. How do you select the register bank in 8051 microcontroller?

The value presented by RS1 &RS0 bits select the corresponding register bank

00-reg.bank0,01-reg.bank1,10-reg.bank2,11-reg.bank3

23. Draw the pin diagram of 8051. [Nov/Dec 2016]

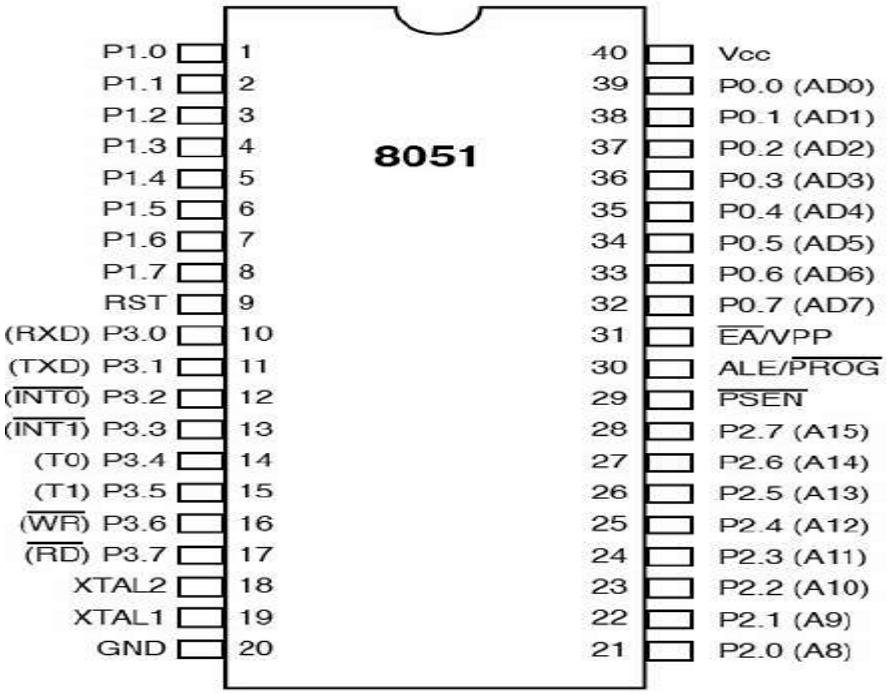

PART-B

1. Explain the architecture of 8051 with its diagram.
2. Explain the I/O pins ports and circuit details of 8051 with its diagram.
3. Write an 8051ALP to create a square wave 66%duty cycle on bit3 of port 1.
4. With example explain the arithmetic and logic instruction of 8051 microcontroller.
5. With example explain the different instruction set of 8051 microcontroller.
6. Write a program based on 8051 instruction set to pack array of unpacked BCD digits.
7. Explain the different addressing modes of 8051
8. Write a program to bring in data in serial form and send it out in parallel form using 8051
9. Explain the data types and assembler directives of 8051
10. Explain about the register banks and special function register of 8051 in detail

UNIT- V INTERFACING MICROCONTROLLER

1. List the feature of keyboard and display interface.

It has built in hardware to provide key bounce
It provides 8 byte FIFO RAM to store keycodes
It provides multiplexed display interface with blanking and inhibit options
It has two key depression modes (2 key lock out, N key roll over mode)

8279 has 2 output modes for display interface(left entry, Right entry)

2. Name any method available for error correction during serial communication.

Parity bits
Check sum
Cyclic redundancy check
Hamming code with 4 bit parity to encoder

3. What is meant by time multiplexed LED display?

At a time only one LED displays data while other LED remain in off condition, But within few seconds, next LED is turned on while all others are in OFF condition. This is repeated continuously so that all LEDs seem to display data simultaneously.

4. What is difference between two key lock out and N-key rollover modes in 8279?

Two key lockout- If two keys are pressed within the debounce cycle. It is simultaneous Depression, key will be recognized until one of the key is released. The final key is released will be recognized and entered.

N-Key rollover mode- Each key depression is treated independently. If simultaneous depression occurs, then the keys are recognized and entered according to the order the keyboard scan found them

5. What is need for A/D converter?

Analog signals are needed for controlling certain analog devices in many applications. The analog –to digital converters are used to convert the analog to digital signals.

6.How does 8051 differentiate between the external and internal program memory?

S.NO	EXTERNAL PROGRAM MEMORY	INTERNAL PROGRAM MEMORY
1	EA pin is high	EA pin is grounded
2.	PSEN signal is activated	PSEN is grounded
3.	8051 can address up to 64 KB of External program memory	4KB of internal program memory is available
4.	Accessible by only direct and indirect addressing modes	Accessible by all addressing modes

7.What are the two memory address pointers in 8051 microcontroller?

Program counter and Data Pointer are the two memory address pointers in 8051. The program instruction bytesare fetched from the locations in memory that are addressed by the PC. The DPTR register is made up of two 8 bit registers named DPH and DPL, which are used to furnish memory address for internal and external code access and external data access

8. Give the PSW setting for register bank 2 as default bank in 8051 microcontroller.

7	6	5	4	3	2	1	0
CY	AC	FO	RS1	RS0	OV	-	P

By setting RS1= 1 and RS0 = 0, register bank 2 can be selected.

9. Give steps to program 8051 for serial data transfer.

The 8051 has a serial data communication circuit that uses register SBUF to hold data. Register SCON controls data communication, register PCON controls data rates, and pins RXD (P3.0) and TXD (P3.1) connect to serial data network

10. What is the significant of GATE in TMOD control register?

It is OR gate enable bit which controls RUN/STOP of timer 1/0.

Timer/ Counter is enabled while TR 1/0 in TCON is set and signal on external interrupt INT1/0 pin is high. Cleared to 0 by program to enable timer to run , if bit TR1/0 in TCON is set.

11. How does the status of EA pin affect the access to internal and external program memory?

EA- Enable Interrupt bit. Cleared to 0 by program to disable all interrupts , set to 1 to permit individual interrupts to be enabled by their enabled bits . It is set to access data from external memory or else it is grounded for internal memory operations.

12. What happens in power down mode of 8051 microcontroller?

The memory locations of power down RAM can be maintained through a separate small battery backup supply so that the content of these RAM can be preserved during power failure conditions.

13. Mention the various timer modes of 8051.[Nov/ Dec 2016]

0=13 bit timer
1=16 bit timer
2=8 bit auto reloads
3=split timer mode

14. Write an ALP program for function to generate 100µs delay using timer 0.

```
Delay   :   MOV TMOD, # 01H; initialize TMOD
            MOV TL0,#47H ; initialize TL0
            MOV TL0, #FFH; initialize TH0
            SETB TR0; start timer
            Wait: JNB TF0, Wait; wait for TF0
            CLR TR0; stop timer
            CLR TF0; clear TF0
            RET
```

15. What is the use of timer and counter in 8051?

- Interval Timing
  - Periodic event timing
  - Time base for measurements
- Event Counting
- Baud Rate Generation

16. Write a program for the 8051 to transfer letter "A" serially at 4800 baud, continuously.

```
        MOV TMOD, #20H
        MOV   TH1, #-6
        MOV   SCON, #50H
        SETB  TR1
AGAIN:  MOV   SBUF, #"A"
HERE:   JNB   T1, HERE
        CLR   T1
        SJMP  AGAIN
```

17. Mention the step angle for stepper motor in 8051.

The step angle is the maximum degree of rotation associated with a single step.
The relation between RPM steps per revolutions and step per second.
Step per second = RPM X steps for revolution / 60

18. What are the function of assembler and linker in 8051?

The assembler translates assembly language statement to their binary equivalents usually known as a object code. At link time, separately assembled module is combined in to one single load module by the linker.

19. Mention the application of stepper motor.

1. **Industrial Machines** – Stepper motors are used in automotive gauges and machine tooling automated production equipments.
2. **Security** - new surveillance products for the security industry.
3. **Medical** – Stepper motors are used inside medical scanners, samplers, and also found inside digital dental photography, fluid pumps, respirators and blood analysis machinery.
4. **Consumer Electronics** – Stepper motors in cameras for automatic digital camera focus and zoom functions.

20. What are the different types of stepper motor?

There are three main types of stepper motors, they are:

1. Permanent magnet stepper
2. Hybrid synchronous stepper
3. Variable reluctance stepper

Permanent Magnet Stepper Motor: Permanent magnet motors use a permanent magnet (PM) in the rotor and operate on the attraction or repulsion between the rotor PM and the stator electromagnets.
Variable Reluctance Stepper Motor: Variable reluctance (VR) motors have a plain iron rotor and operate based on the principle that minimum reluctance occurs with minimum gap, hence the rotor points are attracted toward the stator magnet poles.
Hybrid Synchronous Stepper Motor: Hybrid stepper motors are named because they use a combination of permanent magnet (PM) and variable reluctance (VR) techniques to achieve maximum power in a small package size.

21. Which register is used for serial programming in 8051? Illustrate it.

SBUF- SBUF register is used for serial communication .for a byte of data to be transferred via TxDline ,it must be placed in the SBUF register . SCON & PCON is also used for serial communication.

22. How is A/D converter interfaced with 8051? [may 2014]

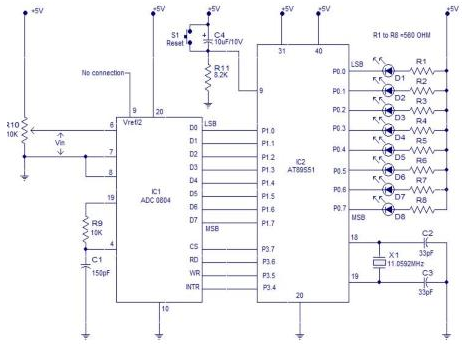

23. State how baud rate is calculated for serial date transfer rate in mode 1.Nov/DEC 2016]

This utility program calculates baud rates for 8051-compatible serial ports operating in Mode 1 using:

- Timer 1 Mode 2 with SMOD = 0.
  Reload values calculated for TH1.
- Timer 1 Mode 2 with SMOD = 1.
  Reload values are calculated for TH1.
- Timer 2 (using the internal clock).

PART-B

1. Draw the diagram to interface a stepper motor with 8051 microcontroller and explain also write an 8051 ALP to run the stepper motor in both forward and reverse direction with delay.
2. Explain how interrupts are handled in 8051.
3. Write short notes on LCD interface.
4. Write notes on 8051 serial port programming.
5. Explain about external memory interfacing to 8051
6. Write notes on 8051 timer and counter programming.
7. Draw and explain the ADC interfacing using 8051.
8. Draw and explain the DAC interfacing using 8051.
9. Explain the keyboard interfacing using 8051
10. Explain the sensor interfacing using 8051

Reg. No. | | | | | | | | | | | | |

Question Paper Code : 57296

B.E./B.Tech. DEGREE EXAMINATION, MAY/JUNE 2016

Fourth/Fifth Semester

Computer Science & Engineering

EC 6504 – MICROPROCESSOR AND MICROCONTROLLER

(Common to Information Technology and Medical Electronics/Bio Medical Engineering/Electronics and Communication Engineering)

(Regulations 2013)

Time : Three Hours **Maximum : 100 Marks**

Answer ALL questions.

PART – A (10 × 2 = 20 Marks)

1. List the flags of 8086.
2. Define stack.
3. Differentiate External verses Internal Bus.
4. Compare closely coupled and loosely coupled configurations.
5. List the advantages and disadvantages of parallel communication over serial communication.
6. What is key bouncing ?
7. What are the different ways of operand addressing in 8051 ?
8. Write an 8051 ALP to toggle P1 a total of 200 times. Use RAM location 32H to hold your counter value instead of registers R0 -R7.
9. Compare polling and interrupt.
10. Define baud rate of 8051.

PART – B (5 × 16 = 80 Marks)

11. (a) (i) Explain the Data transfer, arithmetic and branch instructions with examples. (9)

(ii) Write an 8086 ALP to find the sum of numbers in an array of 10 element. (7)

OR

(b) Define interrupts and their types. Write in detail about interrupt service routine. (16)

12. (a) Explain in detail about the system bus timing of 8086. (16)

OR

(b) Explain the following :

(i) Multiprocessor system (4)

(ii) Coprocessor (4)

(iii) Multiprogramming (4)

(iv) Semaphore (4)

13. (a) Explain in detail about DMA controller with its diagram. (16)

OR

(b) Draw and explain the block diagram of alarm controller. (16)

14. (a) Explain the architecture of 8051 with its diagram. (16)

OR

(b) Write an 8051 ALP to create a square wave of 66% duty cycle on bit 3 of port 1. (16)

15. (a) Draw the diagram to interface a stepper motor with 8051 microcontroller and Write its ALP to run the stepper motor in both forward and reverse direction with delay. (16)

OR

(b) Explain 8051 serial port programming with examples. (16)

———————

2 57296

Reg. No. : 1 1 0 3 1 3 1 0 4 0 0 1

Question Paper Code : 77121

B.E./B.Tech. DEGREE EXAMINATION, APRIL/MAY 2015.

Fourth Semester

Computer Science and Engineering

EC 6504 — MICROPROCESSOR AND MICROCONTROLLER

(Common to Information Technology and Medical Electronics)

(Regulation 2013)

Time : Three hours Maximum : 100 marks

Answer ALL questions.

PART A — (10 × 2 = 20 marks)

1. List the addressing modes of 8086. Give examples.
2. Write about the different types of interrupts supported in 8086.
3. Define bus. Why bus request and cycle stealing are required?
4. Draw the read cycle timing diagram for minimum mode.
5. Give the various modes and applications of 8254 timer?
6. Draw the block diagram of alarm controller with 8086 as processor.
7. Draw the diagram for Processor Status Word in 8051.
8. How do you select the register bank in 8051 microcontroller?
9. Differentiate between timers and counters. Draw the diagram of TCON in 8051.
10. Which register is used for serial programming in 8051? Illustrate it.

PART B — (5 × 16 = 80 marks)

11. (a) (i) Explain briefly about the internal hardware architecture of 8086 microprocessor with a neat diagram. (10)

(ii) Write a 8086 assembly language program to convert BCD data - Binary data. (6)

Or

(b) (i) Explain about the Assume, EQU, DD assembler directives. (8)

(ii) Explain briefly about Interrupt handling process in 8086. (8)

12. (a) Discuss the maximum mode configuration of 8086 by with a neat diagram. Mention the functions of the various signals. (16)

Or

(b) (i) Compare closely coupled configuration with loosely coupled configuration. (8)

(ii) Write a 8086 assembly language program to cheek whether the given string is palindrome or not. (8)

13. (a) (i) Explain how D/A and A/D interfacing done with 8086 with an application. (10)

(ii) What is DMA? Explain the DMA based data transfer using DMA controller. (6)

Or

(b) (i) Draw the block diagram of traffic light control system using 8086.(8)

(ii) Write the algorithm and assembly language program for traffic light control system. (8)

14. (a) (i) Explain the architecture of 8051 microcontroller with neat diagram. (8)

(ii) Explain the TMOD function register and its timer modes of operations. (8)

Or

(b) (i) Explain about Arithmetic and control instruction set in 8051. (10)

(ii) Write a program to bring in data in serial form and send it out in parallel form using 8051. (6)

15. (a) (i) Describe the different modes of operation of timers/counters in 8051 with its associated register. (10)

(ii) How does one interface a 16 × 2 LCD Display using 8051 Microcontroller? (6)

Or

(b) Draw the diagram to interface a stepper motor with 8051 microcontroller and explain. Write a 8051 assembly language program to run the stepper motor in both forward and reverse direction with delay. (16)

———————

Reg. No. : | | | | | | | | | | | | |

Question Paper Code : 71455

B.E./B.Tech. DEGREE EXAMINATION, APRIL/MAY 2015.

Fifth Semester

Electronics and Communication Engineering

EC 2304/EC 54 — MICROPROCESSORS AND MICROCONTROLLERS

(Regulation 2008)

(Common to PTEC 2304 — Microprocessors and Micro Controllers for B.E. (Part-Time) Fifth Semester Electronics and Communication Engineering Regulation 2009)

Time : Three hours Maximum : 100 marks

Answer ALL questions.

PART A — (10 × 2 = 20 marks)

1. List the 16 – bit registers of 8085 microprossor.

2. List the allowed register pairs of 8085.

3. Compare Procedure and Macro.

4. What is the purpose of segment registers in 8086?

5. What is the various programmed data transfer method?

6. Give the different types of command words used in 8259A.

7. What are the modes used in keyboard Display Interface?

8. What is synchronous data transfer?

9. Specify the single instruction, which clears the most significant bit of B register of 8051, without affecting the remaining bits.

10. Give the DJNZ instruction of Intel 8051 microcontroller.

PART B — (5 × 16 = 80 marks)

11. (a) Describe in detail with neat diagram the Pin Configuration of the 8085 Processor with its functions. (16)

Or

(b) Explain in detail the addressing modes of 8085 with suitable examples. (16)

12. (a) Enumerate about the Architecture of 8086 Microprocessor with a block diagram and also explain its functions in detail. (16)

Or

(b) Write a 8086 ALP to sort an array of ten bytes in ascending order. Add comments to your Program. (16)

13. (a) (i) Using model, write a program to communicate between two 8086 microprocessors using 8255. (10)

(ii) Show the control word format of 8255 and explain how each bit is programmed. (6)

Or

(b) With neat block diagram, explain the description and functions of 8259. (16)

14. (a) Explain in detail the interfacing of Temperature Controller using 8085 Processor. (16)

Or

(b) Explain in detail the procedure and the block diagram involved in the Traffic Light Controller using 8085. (16)

15. (a) Describe the architecture of 8051 with neat diagram. (16)

Or

(b) Explain in detail the various modes available for timer in 8051. (16)

———————

Reg. No. : [ ][ ][ ][ ][ ][ ][ ][ ][ ][ ][ ][ ]

Question Paper Code : 91408

B.E./B.Tech. DEGREE EXAMINATION, NOVEMBER/DECEMBER 2014.

Fifth Semester

Electronics and Communication Engineering

EC 2304/EC 54 — MICROPROCESSORS AND MICROCONTROLLERS

(Regulation 2008)

(Common to PTEC 2304 — Microprocessors and Micro Controllers for B.E (Part-Time) Fifth Semester Electronics and Communication Engineering Regulation 2009)

Time : Three hours Maximum : 100 marks

Answer ALL questions.

PART A — (10 × 2 = 20 marks)

1. What is a Tristate bus?

2. What is direct memory access?

3. What is an assembler?

4. What is virtual addressing mode?

5. What is a sample and hold circuit?

6. What is key-debouncing?

7. List the SFRs involved in interrupt programming of 8051.

8. Why it is necessary to have external pull-up for port O in 8051.

9. What is PWM?

10. Give the schematic to interface a relay with microcontroller?

PART B — (5 × 16 = 80 marks)

11. (a) (i) Draw and explain minimum mode system configuration of 8086 microprocessor. (8)

(ii) Briefly explain the architectural advancements of microprocessors. (8)

Or

(b) With a neat diagram explain the bus interfacing unit and execution unit available in 8086 microprocessor. (16)

12. (a) Briefly explain the addressing modes of 8086 with example. (16)

Or

(b) (i) Briefly explain the arithmetic group of instructions available in 8086 microprocessor. (8)

(ii) Briefly explain the assembler directives of 8086. (8)

13. (a) With a neat block diagram explain the key board and display controller IC 8279. (16)

Or

(b) (i) With a neat block diagram explain programmable interval IC 8253. (8)

(ii) Briefly explain the method of interfacing A-to-D converter with microcontroller. (8)

14. (a) Explain in detail the memory organization of 8051 microcontroller. (16)

Or

(b) (i) Briefly explain the data transfer instructions available in 8051 microcontroller. (8)

(ii) Using timers in 8051 write a program to generate square wave of 100 ms, 50% duty cycle. (8)

15. (a) (i) With a neat diagram explain washing machine control using microcontroller. (8)

(ii) With a diagram explain the DC motor control using 8051 microcontroller. (8)

Or

(b) (i) Explain stepper motor control using 8051 microcontroller. (8)

(ii) With a neat diagram explain the RTC interfacing using 12C standard. (8)

———————

Reg. No. :

Question Paper Code : 51406

B.E./B.Tech. DEGREE EXAMINATION, MAY/JUNE 2014.

Fifth Semester

Electronics and Communication Engineering

EC 2304/EC 54 — MICROPROCESSORS AND MICROCONTROLLERS

(Regulation 2008)

(Common to PTEC 2304 — Microprocessors and Micro controllers for B.E. (Part-Time) Fifth Semester Electronics and Communication Engineering — Regulation 2009)

Time : Three hours Maximum : 100 marks

Answer ALL questions.

PART A — (10 × 2 = 20 marks)

1. State the different data transfer schemes.
2. What are the advantages of memory-mapped I/O over I/O-mapped I/O?
3. List the flags in 8086 and state its functions.
4. Identify the addressing modes in the following instructions.
   AND AL, BL
   SUB AL, 24H
   MOV AL, (BP)
   MOV CX, 1245H.
5. What is key debouncing? What are the methods to detect the debouncing?
6. State the signals that govern the operation of the printer.
7. How does the processor 8051 knows whether on-chip ROM or external program memory is used?
8. What is the difference between AJMP and LJMP instruction?
9. Write about the design steps involved in using microcontroller for Stepper motor.
10. State the significance of using microprocessors in interfacing traffic limit control.

PART B — (5 × 16 = 80 marks)

11. (a) (i) The data transfer rate of I/O device 'A' is considerably less than that of the microprocessor. Draw a flowchart of data transfer operation to be used. (8)

(ii) Describe the functions of Execution Unit and Bus Interface Unit. (8)

Or

(b) Write notes on

(i) Maximum mode in 8086. (8)

(ii) Interrupt processing. (8)

12. (a) (i) Develop a program to transfer 10 bytes of data from memory location starting from 2000H. (8)

(ii) Describe program location control directives with suitable examples. (8)

Or

(b) (i) Develop a program to multiply two 16 bit numbers stored in P1 and P2. (8)

(ii) Explain rotate and shift instructions with suitable examples. (8)

13. (a) (i) Explain the function of Programmable Peripheral Interface — Intel 8255. (8)

(ii) Draw a block diagram to interface a Analog to Digital Converter (ADC) with a microprocessor and explain its working. (8)

Or

(b) (i) Draw a schematic to interface keyboard and display with 8085 using 8255 and explain. (8)

(ii) Write notes on Programmable Interval Timers 8253 and 8254. (8)

14. (a) (i) Enumerate about the ports available in 8051 microcontroller. (8)

(ii) Write an assembly language program for 8051 microcontroller to send 20 output pulses at P2.0. Vary the duration of pulse using NOP. (8)

Or

(b) (i) Describe the serial interface with 8051 microcontroller. (8)

(ii) Write an assembly language program for 8051 to find the largest of three numbers. (8)

15. (a) (i) Draw a circuit schematic for washing machine control using 8051. (8)

(ii) Explain in detail about the RTC Interfacing using 12C Standard using microcontroller. (8)

Or

(b) With a complete example, explain the design of Traffic Light Controller using Microcontroller and Microprocessor. (16)

———————

89

Reg. No. : | | | | | | | | | | | | |

Question Paper Code : 80345

B.E./B.Tech. DEGREE EXAMINATION, NOVEMBER/DECEMBER 2016.

Fifth Semester

Electronics and Communication Engineering

EC 6504 — MICROPROCESSOR AND MICROCONTROLLER

(Common to Fifth Semester Biomedical Engineering and also common to Fourth Semester Information Technology and Medical Electronics/Computer Science and Engineering)

(Regulations 2013)

Time : Three hours Maximum : 100 marks

Answer ALL questions.

PART A — (10 × 2 = 20 marks)

1. List the flags of 8086 microprocessor.

2. List the segment registers of 8086.

3. Define machine cycle.

4. Define Bus.

5. How DMA is initiated?

6. What is the drawback of memory mapped I/O?

7. Draw the pin diagram of 8051.

8. What is the significance of EA pin?

9. List the modes of Timer in 8051.

10. State how baud rate is calculated for serial data transfer in mode 1.

PART B — (5 × 16 = 80 marks)

11. (a) (i) Explain the internal hardware architecture of 8086 microprocessor with neat diagrams. (12)

(ii) Write a short note about assembler directives. (4)

Or

(b) Explain the various addressing modes of 8086 microprocessor with suitable examples. (16)

12. (a) Discuss about the multiprocessor configurations of 8086. (16)

Or

(b) Explain in detail about the system bus timing of 8086/8088. (16)

13. (a) Explain in detail about DMA controller. (16)

Or

(b) Explain the procedure of interfacing D/A and A/D converter circuit. (16)

14. (a) Explain in detail about the architecture of 8051 microcontroller with a neat diagram. (16)

Or

(b) Write an ALP using 8051 instructions to receive bytes of data serially and put them in P1. Set the baud rate at 4800, 8-bit data, and 1 stop bit. (16)

15. (a) Describe the different modes of operation of timers/counters in 8051 microcontroller. (16)

Or

(b) Draw a diagram to interface a stepper motor with 8051 microcontroller, also write an 8051 ALP to run the stepper motor in both forward and reverse direction with a delay. (16)

———————